A↑G F

Immerse yourself in the game with the curved 45'' Dual QHD Red Eagle Gaming Display

Unleash a panoramic visual experience and immerse yourself into your gaming world with this ultra-wide DQHD 5120 x 1440 resolution 32:9 display. With 1500R curved VA panel with a 165Hz refresh rate featuring 0.8ms MPRT, delivering a high framerate and smooth yet sharp rendered images with beautiful colour, that brings your games to life.

DQHD

Ultra-wide 32:9 monitors boasting DQHD 5120 x 1440 resolution, also recognized as Dual QHD, guarantee razor-sharp images that bring your games to life. These monitors empower you to organize your gaming setup for an unparalleled gaming experience. You won't miss a single detail!

165Hz & 0.8ms MPRT

With 165Hz refresh rate and 0.8ms MPRT response time the force is with you! Make split second decisions and be sure the image on the screen is always sharp and smooth.

01 DISPLAY CHARACTERISTICS

Design	3-side borderless
Diagonal	44.5 cm", 113cm
Panel	VA, matte finish
Curved	1500R
Native resolution	5120 x 1440 @165Hz (7.4 megapixel DQHD)
Aspect ratio	32:9
Panel brightness	450 cd/m²
Static contrast	3000:1
Advanced contrast	80M:1
Response time (MPRT)	0.8ms
Viewing zone	horizontal/vertical: 178°/178°, right/left: 89°/89°, up/down: 89°/89°
Colour support	16.7mln 8bit (sRGB: 100%, NTSC: 80%)
Horizontal Sync	30 - 260kHz
Viewable area W x H	1087.5 x 305.9mm, 42.8 x 12.0"
Pixel pitch	0.212mm
Colour	matte, black

02 INTERFACES / CONNECTORS / CONTROLS

Signal input	HDMI x2 (v. 2.1) DisplayPort x1 (v. 1.4) USB-C x1 (Power delivery 90W)
USB HUB	x3 (v.3.2 (Gen 1, 5Gbit; DC5V, 900mA))
USB-C DOCK	x1 (Power delivery 90W, LAN, USB v. 3.2 (Gen 1, 5Gbit))
HDCP	yes
Headphone connector	yes
RJ45 (LAN)	x1

03 FEATURES

KVM switch	yes
Blue light reducer	yes
Flicker free	yes
Adaptive Sync support	yes
Extra	i-Style Colour
HDR	400
OSD languages	EN, DE, FR, IT, RU, JP, CZ, NL, PL
Control buttons	navigation button: Menu/Execution, Down (i-Style Colour), Up (Input Select), Right (Volume), Left (Night Mode), Power
User controls	picture (brightness, contrast, Black Tuner, Sharpness, OD, Adv. Contrast, Night Mode, X-Res Technology), colour (warm, normal, cool, user colour, blue light reducer, gamma), input select, PBP (PBP mode, sub win input, PBP Swap, audio input), audio (volume, mute), i-Style Mode, language, OSD settings (OSD H. position, OSD V. position, OSD background, OSD time out, information), setup menu (memory recall, MST, DSC, HDMI, KVM, USB-C, USB BC, video adjust mode, HDMI RGB range, direct drive, Adaptive Sync, MBR, HDR, opening logo, LED)
Speakers	2 x 3W
Convenience	Kensington-lock™ prepared, DDC/CI, DDC2B, Mac OSX

04 MECHANICAL

Display position adjustments	height, tilt
Height adjustment	130mm
Tilt angle	20° up; 3° down
VESA mounting	100 x 100mm, 200 x 100mm
Cable management system	yes

05 ACCESSORIES INCLUDED

Cables	power, USB, HDMI, DP
Other	quick start guide, safety guide

06 POWER MANAGEMENT

Power supply unit	internal
Power supply	AC 100 - 240V, 50/60Hz
Power usage	37W default, 0.5W stand by, 0.3W off mode

07 SUSTAINABILITY

Regulations	CE, TÜV-Bauart, PSE, RoHS support, ErP, WEEE, VCCI, REACH, UKCA
Energy efficiency class (Regulation (EU) 2017/1369)	F
REACH SVHC	above 0.1%: Lead
Other	REACH SVHC above 0.1%: Lead

08 DIMENSIONS / WEIGHT

Product dimensions W x H x D	1090 x 409(539) x 275mm
Box dimensions W x H x D	1260 x 470 x 315mm
Weight (without box)	11.2kg
Weight (without stand)	8.9kg
Weight (with box)	16.4kg
EAN code	4948570122264

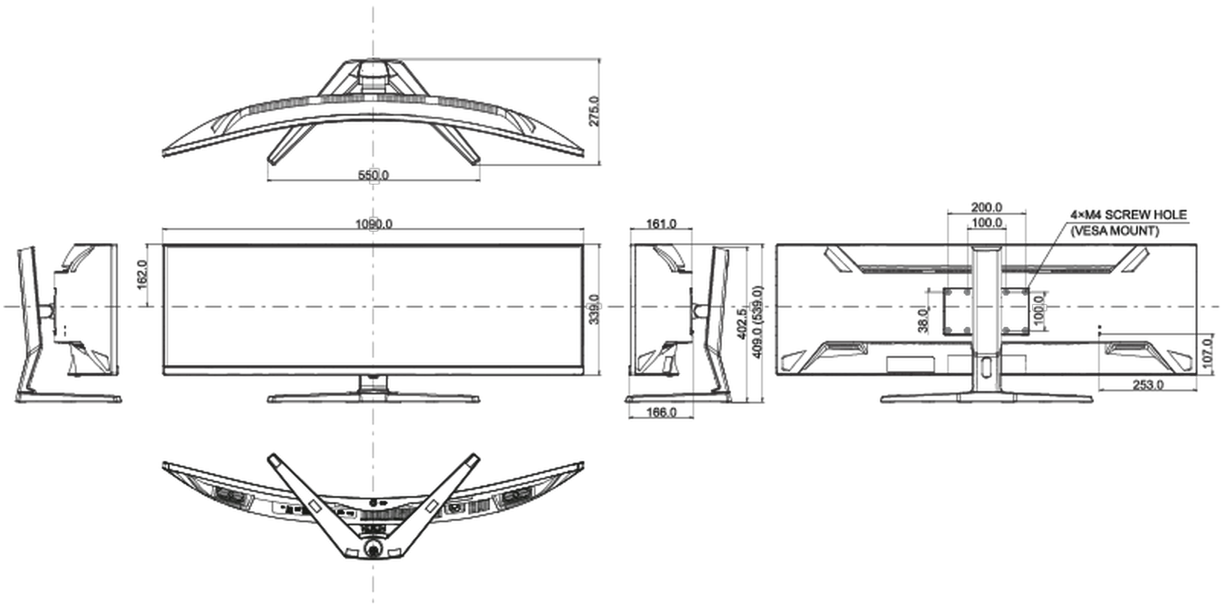

All trademarks and registered trademarks acknowledged. E & O E. Specification subject to change without notice. All LCD's comply with ISO-9241-307:2008 in connection with pixel defects.

© IIYAMA CORPORATION. ALL RIGHTS RESERVED