21.5” IPS 3-side borderless monitor with height-adjustable stand for multi-monitor set-ups

The stylish edge-to-edge design of the ProLite XUB2293HS with IPS panel technology offers accurate and consistent colour reproduction with wide viewing angles. High contrast and brightness values mean the monitor will provide excellent performance for photographic and web design. Equipped with speakers, headphone socket, HDMI and DisplayPort connections, a blue light reducer function to reduce eye fatigue and an ergonomic 150mm height adjustable stand for optimal user comfort, this 21.5’’ ProLite display is a great choice for both multi-monitor configuration and office applications.

Available also with fixed stand : ProLite XU2293HS-B6

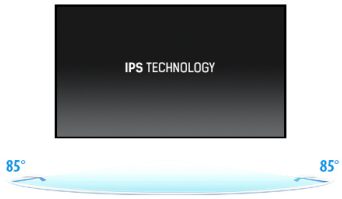

IPS Technology

IPS technology offers higher contrast, darker blacks and much better viewing angles than standard TN technology. The screen will look good no matter what angle you look at it.

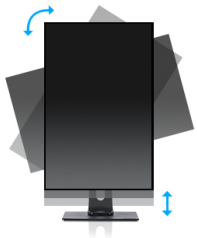

HAS (150mm) + Pivot (rotation both sides)

With a height adjustable stand you will create an ergonomic work posture and position that meets all health and safety requirements. This will not only prevent any health issues but will also increase your productivity. The pivot function allows the screen to rotate from landscape to portrait orientation. This functionality can be useful if the application requires more height than width.

01 DISPLAY CHARACTERISTICS

Design	3-side borderless
Diagonal	21.5", 54.5cm
Panel	IPS panel technology LED, matte finish
Native resolution	1920 x 1080 @100Hz (2.1 megapixel Full HD)
Aspect ratio	16:9
Panel brightness	300 cd/m²
Static contrast	1000:1
Advanced contrast	80M:1
Response time (MPRT)	1ms
Viewing zone	horizontal/vertical: 178°/178°, right/left: 89°/89°, up/down: 89°/89°
Colour support	16.7mln (sRGB: 96%; NTSC: 72%)
Horizontal Sync	30 - 110kHz
Viewable area W x H	478.7 x 260.3mm, 18.8 x 10.3"
Pixel pitch	0.249mm
Colour	matte, black

02 INTERFACES / CONNECTORS / CONTROLS

Signal input	HDMI x1 (v. 1.4) DisplayPort x1 (v. 1.2)
HDCP	yes
Headphone connector	yes

03 FEATURES

Blue light reducer	yes
Flicker free	yes
Adaptive Sync support	yes
Extra	i-style Colour
OSD languages	EN, DE, FR, ES, IT, PT, CN, RU, JP, CZ, NL, TR
Control buttons	Power, Menu, Up / Right / Volume, Down / Left / Eco, Signal/ Exit
User controls	picture adjust (brightness, contrast, i-Style colour, ACR, Eco, OD, X-Res technology), colour settings (gamma, RGB range, colour temp.), image settings (video mode adjust, blue light reducer, sharp and soft, AdaptiveSync), OSD (OSD H. position, OSD V. position, OSD time, OSD background, OSD rotate, language, display information), extra (reset, DDC /CI, signal select, LED, opening logo)
Speakers	2 x 2W
Convenience	Kensington-lock™ prepared, DDC/CI, DDC2B, Mac OSX

04 MECHANICAL

Display position adjustments	height, pivot (rotation), swivel, tilt
Height adjustment	150mm
Rotation (PIVOT function)	90°
Swivel stand	90°; 45° left; 45° right
Tilt angle	23° up; 5° down
VESA mounting	100 x 100mm
Cable management system	yes

05 ACCESSORIES INCLUDED

Cables	power, HDMI
Other	quick start guide, safety guide

06 POWER MANAGEMENT

Power supply unit	internal
Power supply	AC 100 - 240V, 50/60Hz
Power usage	17W typical, 0.5W stand by, 0.3W off mode

07 SUSTAINABILITY

Regulations	TCO Certified, CE, TÜV-Bauart, EAC, RoHS support, ErP, WEEE, REACH, UKCA
Energy efficiency class (Regulation (EU) 2017/1369)	E
REACH SVHC	above 0.1%: Lead, Lead monoxide

08 DIMENSIONS / WEIGHT

Product dimensions W x H x D	492 x 328 (478.5) x 209.5mm
Box dimensions W x H x D	620 x 395 x 126mm
Weight (without box)	3.9kg
Weight (with box)	5.3kg
EAN code	4948570124237

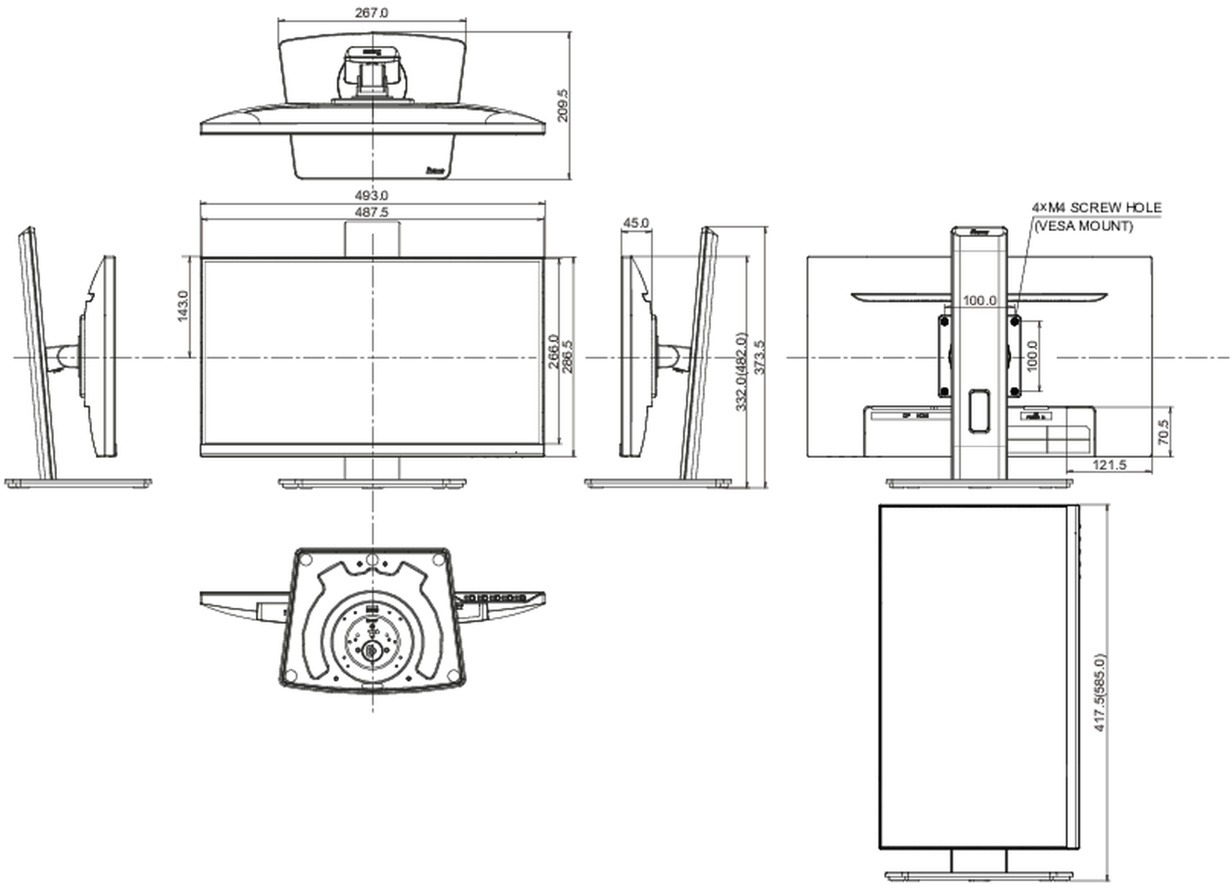

All trademarks and registered trademarks acknowledged. E & O E. Specification subject to change without notice. All LCD's comply with ISO-9241-307:2008 in connection with pixel defects.

© IIYAMA CORPORATION. ALL RIGHTS RESERVED