INFORMATION

45-inch ultra-wide curved monitor with Dual QHD resolution and height-adjustable stand, ideal for immersive multitasking and creative work

If you work across multiple windows, manage creative projects or want a more immersive setup, the ProLite XCB4594DQSU-B1 is built to support the way you work. This 45-inch ultra-wide curved monitor features a 32:9 aspect ratio and a Dual QHD resolution of 5120x1440, providing the screen space of two QHD monitors in a single, seamless display. It removes the interruptions of bezels and brings everything together for a smoother, more efficient workflow.

The curved VA panel surrounds your field of view with vivid colours, high contrast and wide viewing angles. The gentle 1500R curvature creates a more natural and comfortable viewing experience, helping reduce eye movement and maintain focus. With a brightness of 450 cd/m², your content stays sharp and clear, even in brightly lit environments.

A 2ms response time (GTG) and Adaptive Sync support ensure smooth motion for video editing, content scrolling or occasional gaming. Flicker-free technology and a blue light reducer are built in to support eye comfort throughout the day.

With a modern three-side borderless design, the XCB4594DQSU-B1 also offers height and tilt adjustments so you can set up your workspace to suit your needs. Dual HDMI and DisplayPort inputs make it easy to connect your devices, while the integrated 2x3W speakers deliver clear audio for video calls, media or presentations.

Whether you are editing wide-format content, working with complex data or multitasking across several applications, this ultra-wide monitor gives you the space, clarity and comfort to stay productive.

Curved for immersive viewing

Step into an immersive, natural viewing setup that minimizes distortion and reduces eye strain during long work or entertainment sessions.

Deeper blacks and richer detail with VA panel

The VA panel offers exceptional contrast and deep blacks, revealing every nuance between light and dark. Enjoy vivid, lifelike images with minimal light bleed and excellent color depth, especially in darker scenes. Whether watching movies, editing content, or gaming, benefit from consistent picture quality and wide viewing angles that bring every detail to life.

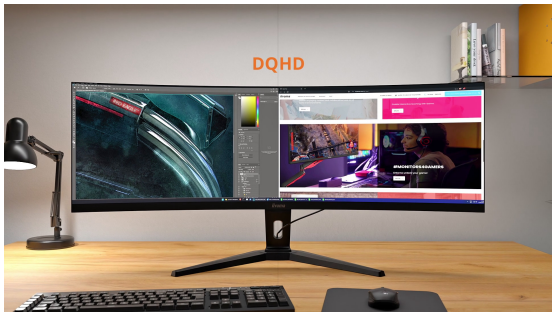

Maximise your multitasking with ultra-wide Dual QHD clarity

Dual QHD resolution gives you the power of two QHD screens in one seamless ultra-wide display. View multiple apps side by side, work across large spreadsheets or immerse yourself in detailed visuals without switching windows. This expanded workspace helps you boost focus, improve efficiency and maintain creative flow throughout the day.

Versatile connectivity for all your devices

Connect multiple devices and accessories in one simple step with HDMI, DisplayPort and the USB hub, streamlining your workspace for maximum efficiency and ensuring a tidy, uninterrupted workflow.

SPECIFICATION

01 DISPLAY CHARACTERISTICS

Design	3-side borderless
Diagonal	44.5", 113cm
Panel	VA, matte finish
Curved	1500R
Native resolution	5120 x 1440 @75Hz (7.4 megapixel DQHD)
Aspect ratio	32:9
Panel brightness	450 cd/m²
Static contrast	3000:1
Advanced contrast	80M:1
Response time (GTG)	2ms
Viewing zone	horizontal/vertical: 178°/178°, right/left: 89°/89°, up/down: 89°/89°
Colour support	16.7mln (sRGB: 100%; NTSC: 80%)
Horizontal Sync	30 - 135kHz
Viewable area W x H	1087.5 x 305.9mm, 42.8 x 12"
Pixel pitch	0.212mm
Colour	matte, black

02 INTERFACES / CONNECTORS / CONTROLS

Signal input	HDMI x2 (v.2.0) DisplayPort x2 (v.1.2)
USB HUB	x4 (2x Type-A v.3.2 Gen 1 (5Gbps, 4.5W), 2x Type-C (5Gbps, 5W))
HDCP	yes
Headphone connector	yes

03 FEATURES

Blue light reducer	yes
Flicker free	yes
Adaptive Sync support	yes
Extra	i-Style Colour
HDR	yes
OSD languages	EN, DE, FR, ES, IT, RU, JP, CZ, NL, PL, UA
Control buttons	Navigation (power) button: Center (Menu/Execution), Front (Move Down/Submenu), Back (Move Up/Input Select), Right (Move Right/Volume), Left (Move Left/Volume)
User controls	picture adjust (brightness, contrast, ECO, HDR, ACR, OD, Adaptive Sync, X-Res technology, black tuner), colour settings (6-axis, i-Style colour, blue light reducer, gamma RGB range, colour temp., user preset), OSD (OSD H. position, OSD V. position, OSD time, OSD background, display information), language, miscellaneous (sharpness, video mode adjust, opening logo, power LED, USB charge, DDC/CI control), input select, audio settings (volume, mute), recall (recall all?)

Speakers	2 x 3W
Convenience	Kensington-lock™ prepared, DDC/CI, DDC2B, Mac OSX

04 MECHANICAL

Display position adjustments	height, tilt
Height adjustment	130mm
Tilt angle	20° up; 3° down
VESA mounting	100 x 100mm, 200 x 100mm
Cable management system	yes

05 ACCESSORIES INCLUDED

Cables	power (1.8m), USB (1.5m), HDMI (1.5m), DP (1.8m)
Other	quick start guide, safety guide

06 POWER MANAGEMENT

Power supply unit	internal
Power supply	AC 100 - 240V, 50/60Hz
Power usage	37W default, 0.5W stand by, 0.3W off mode

07 SUSTAINABILITY

Regulations	CE, TÜV-Bauart, EAC, PSE, RoHS support, ErP, WEEE, VCCI, REACH, UKCA
Energy efficiency class (Regulation (EU) 2017/1369)	F
REACH SVHC	Lead, Decabromodiphenylethane

08 DIMENSIONS / WEIGHT

Product dimensions W x H x D	1090 x 409 (539) x 275mm
Box dimensions W x H x D	1260 x 470 x 315mm
Weight (without box)	10.5kg
Weight (with box)	15.5kg
EAN code	4948570126293

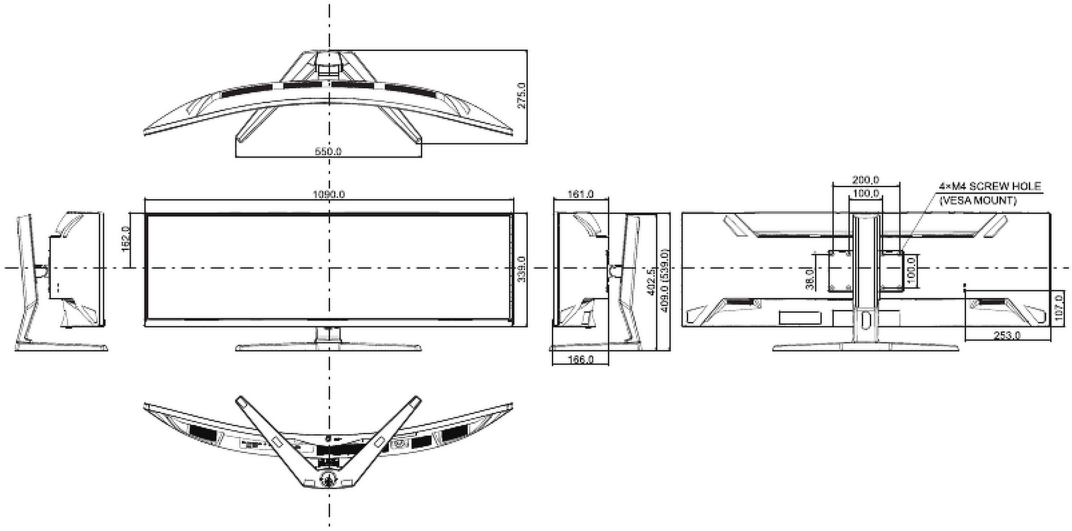
275.0
550.0
1090.0
152.0
339.0
161.0
402.5
409.0 (539.0)
166.0
200.0
100.0
4×M4 SCREW HOLE
(VESA MOUNT)
38.0
100.0
107.0
253.0

GALLERY

iiyama
ProLite
XCB4594DQSU
45"
VA
CURVED

iiyama
ProLite
XCB4594DQSU
45"
VA
CURVED

iiyama
ProLite
XCB4594DQSU
45"
VA
CURVED

iiyama
ProLite
XCB4594DQSU
45"
113 cm
VA
5120x1440
CURVED

iiyama
ProLite
XCB4594DQSU
45"
VA
CURVED

iiyama

ProLite

ProLite
XCB4594DQSU

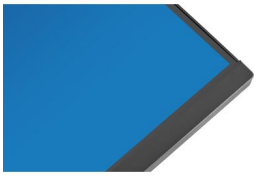

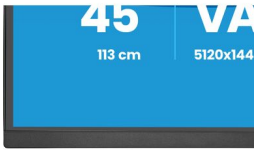
113 cm

All trademarks and registered trademarks acknowledged. E & O E. Specification subject to change without notice. All LCD's comply with ISO-9241-307:2008 in connection with pixel defects. **© IIYAMA CORPORATION. ALL RIGHTS RESERVED**