INFORMATION

43" large format desktop monitor with 4K resolution, giving you the power of four displays in one

Designed for professionals who need more screen space, the ProLite X4373UHSU offers a seamless solution for multitasking and multi-device workflows. The 43" panel delivers rich colours, sharp 3840x2160 resolution and wide 178° viewing angles, with 450cd/m² brightness ensuring excellent visibility in any lighting. For added flexibility, the monitor supports dual mode, allowing you to work in 3840×2160 for detailed content creation and data-heavy applications, or switch to 1920×1080 at 120Hz for smoother motion when displaying dynamic content or live feeds.

The USB-C input with 95W Power Delivery, integrated KVM switch and four-port USB hub make it easy to connect, control and charge multiple devices through a single setup. Flicker-free technology and a blue light reducer help minimise eye strain during long sessions, while the included remote control offers instant access to key settings.

Ideal for content creation, financial dashboards or control environments, this all-in-one monitor maximises clarity, comfort and productivity.

FEATURES

Adapt your display to match your pace

Switch seamlessly between two optimised modes to suit the task at hand. Dual Mode empowers your workflow by offering crystal-clear 4K resolution for precise data work, or a responsive 120Hz Full HD setting for smooth motion during live feeds and dynamic content. One screen with two smart ways to stay productive, without compromise

Deeper blacks and richer detail with VA panel

The VA panel offers exceptional contrast and deep blacks, revealing every nuance between light and dark. Enjoy vivid, lifelike images with minimal light bleed and excellent color depth, especially in darker scenes. Whether watching movies, editing content, or gaming, benefit from consistent picture quality and wide viewing angles that bring every detail to life.

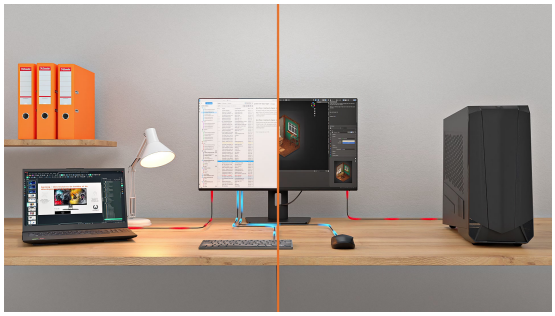

Easy multi-device control with KVM

Easily switch between multiple computers using one monitor, keyboard, and mouse, making multitasking smooth and efficient.

Built-in audio without extra clutter

Enjoy clear, pleasant sound for calls, videos, and music while keeping your desk free of extra speakers, thanks to the integrated audio.

SPECIFICATION

01 DISPLAY CHARACTERISTICS

Diagonal	42.5", 108cm
Panel	VA LED matrix
Native resolution	3840 x 2160 @60Hz (DisplayPort, DP&HDMI, 8.2 megapixel 4K UHD 3840 × 2160 60Hz (Dual Mode – 1920 × 1080 120Hz))
Aspect ratio	16:9
Panel brightness	450 cd/m²
Static contrast	4000:1
Advanced contrast	80M:1
Response time (GTG)	3ms
Viewing zone	horizontal/vertical: 178°/178°, right/left: 89°/89°, up/down: 89°/89°
Colour support	1.07B 10bit (8bit + Hi-FRC) (sRGB 100%, NTSC: 85%)
Horizontal Sync	30 - 135kHz
Viewable area W x H	941.18 x 529.42mm, 37.1 x 20.8"
Pixel pitch	0.245mm
Colour	matte, black

02 INTERFACES / CONNECTORS / CONTROLS

Signal input	HDMI x2 (v.2.0) DisplayPort x1 (v.1.2) USB-C x1 (DP Alt Mode, PD 95W)
USB HUB	x4 (2x Type-A v.3.2 Gen 1 (5Gbps, 4.5W) 2x Type-C (5Gbps, 5W))
HDCP	yes
Headphone connector	yes

03 FEATURES

KVM switch	yes
Blue light reducer	yes
Flicker free	yes
Extra	headphone hook, remote control
HDR	yes, HDR10
OSD languages	EN, DE, FR, ES, IT, PT, RU, JP, NL, PL, UA
Control buttons	Input Select, +/Volume, -/Shortcut, Menu, Power
User controls	picture adjust (brightness, contrast, ECO, HDR, ACR, OD, X-res technology, black tuner), colour settings (6-axis, i-Style colour, blue light reducer, gamma, RGB range, colour temperature, user preset), PiP/PbP (PiP/PbP, sub-source, PiP position, PiP size, swap, audio input), OSD (OSD H. position, OSD V. position, OSD time, OSD background, display information, language), miscellaneous (sharpness, video mode adjust, opening logo, power LED, USB-C speed, USB charge, KVM, DDC/CI control, dual mode), input select (source), audio settings (volume, mute audio), recall (recall all?)
Speakers	2 x 7W
Convenience	Kensington-lock™ prepared, DDC/CI, DDC2B, Mac OSX

04 MECHANICAL

Display position adjustments	tilt
Tilt angle	10° up; 2° down
VESA mounting	200 x 100mm

05 ACCESSORIES INCLUDED

Cables	power (1.8m), USB (1.8m), HDMI (1.8m), DP (1.8m), USB-C (1.0m)
Other	quick start guide, safety guide
Remote control	yes (batteries included)

06 POWER MANAGEMENT

Power supply unit	internal
Power supply	AC 100 - 240V, 50/60Hz
Power usage	41W typical, 0.5W stand by, 0.5W off mode

07 SUSTAINABILITY

Regulations	CE, TÜV-Bauart, EAC, RoHS support, ErP, WEEE, VCCI, REACH, UKCA
Energy efficiency class (Regulation (EU) 2017/1369)	E
REACH SVHC	above 0.1%: Lead

08 DIMENSIONS / WEIGHT

Product dimensions W x H x D	977.5 x 621.5 x 251mm
Box dimensions W x H x D	1071 x 760 x 240mm
Weight (without box)	14.7kg
Weight (with box)	19.3kg
EAN code	4948570126590

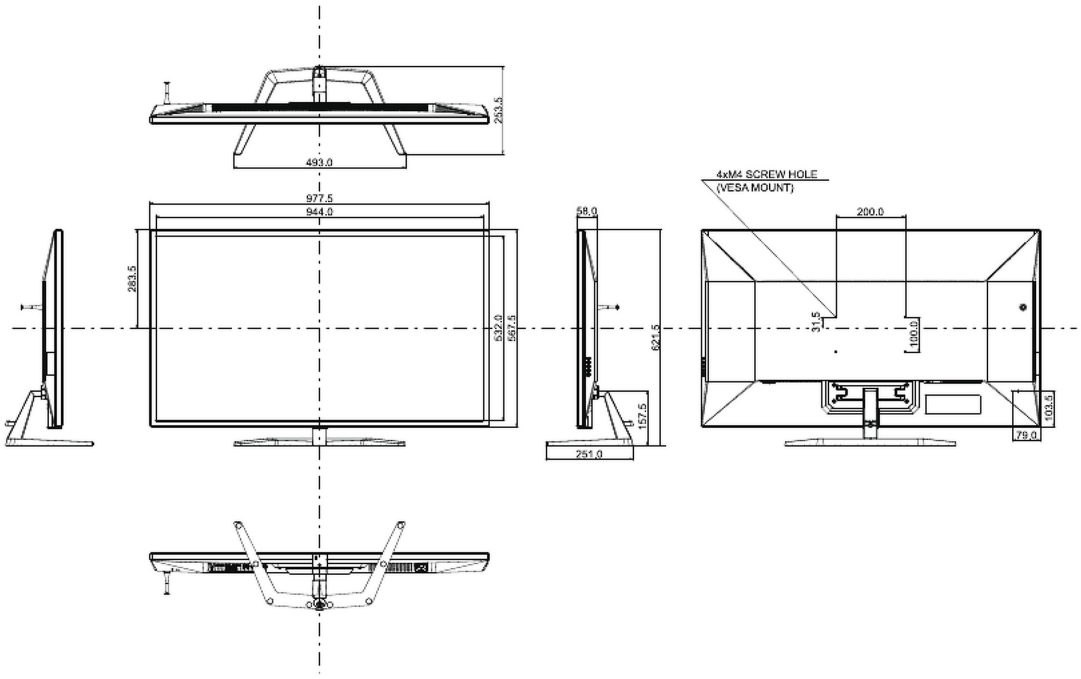
283.5
493.0
977.5
944.0
283.5
532.0
567.5
58.0
621.5
157.5
251.0
4xM4 SCREW HOLE
(VESA MOUNT)
200.0
31.5
100.0
103.5
79.0

GALLERY

iiyama
ProLite
X4373UHSU
43"
108cm
VA
PANEL
4K
FHD
DUAL MODE
KVM
SWITCH
65W
USB-C
2x7W

iiyama
ProLite
X4373UHSU
43"
108cm
VA
PANEL
4K
FHD
DUAL MODE
KVM
SWITCH
65W
USB-C
2x7W

iiyama
ProLite
X4373UHSU
43"
108cm
VA
PANEL
4K
FHD
DUAL MODE
KVM
SWITCH
65W
USB-C
2x7W

iiyama
ProLite
X4373UHSU
43"
108cm
VA
PANEL
4K
FHD
DUAL MODE
KVM
SWITCH
65W
USB-C
2x7W

iiyama
ProLite
X4373UHSU
43"
108cm
VA
PANEL
4K
FHD
DUAL MODE
KVM
SWITCH
65W
USB-C
2x7W

iiyama

iiyama

iiyama

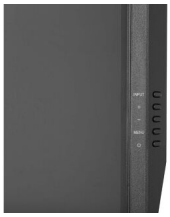

All trademarks and registered trademarks acknowledged. E & O E. Specification subject to change without notice. All LCD's comply with ISO-9241-307:2008 in connection with pixel defects. **© IIYAMA CORPORATION. ALL RIGHTS RESERVED**