INFORMATION

27" QHD IPS monitor with 4-side slim bezel and USB hub

Designed to support your productivity, the ProLite X2793QSU helps you stay focused and efficient throughout the day. The 27" QHD (2560×1440) screen gives you more space to work with, allowing you to view documents side by side, edit with precision or keep multiple applications open at once, all in sharp detail.

The IPS panel delivers vivid colours and consistent clarity from any viewing angle. Flicker-free technology and a blue light reducer enhance visual comfort, especially during extended periods of use.

The four-side ultra bezel design creates a clean and modern look on your desk and is ideal for seamless multi-monitor configurations. Built-in speakers, a two-port USB hub, HDMI and DisplayPort inputs, and a headphone socket help reduce cable clutter while keeping you connected to essential devices.

With EPEAT registration and TCO Certified compliance, the X2793QSU supports both responsible energy use and reliable everyday performance.

FEATURES

Expand your view with QHD

QHD 2560x1440 resolution offers up to 77% more screen space than Full HD, giving you plenty of room to multitask efficiently, view more content at once, and work with greater precision, without constantly switching between windows.

Multi-screen setup for a panoramic workspace

Connect multiple ultra-slim bezel monitors to create a panoramic workspace, keep your apps in view, streamline multitasking, and boost productivity.

Versatile connectivity for all your devices

Connect multiple devices and accessories in one simple step with HDMI DisplayPort and the USB hub, streamlining your workspace for maximum efficiency and ensuring a tidy, uninterrupted workflow.

Built-in audio without extra clutter

Enjoy clear, pleasant sound for calls, videos, and music while keeping your desk free of extra speakers, thanks to the integrated audio.

SPECIFICATION

01 DISPLAY CHARACTERISTICS

Design	4-side slim bezel
Diagonal	27", 68.5cm
Panel	IPS panel technology LED, matte finish
Native resolution	2560 x 1440 @75Hz (3.7 megapixel QHD)
Aspect ratio	16:9
Panel brightness	350 cd/m²
Static contrast	1000:1
Advanced contrast	80M:1
Response time (MPRT)	1ms
Viewing zone	horizontal/vertical: 178°/178°, right/left: 89°/89°, up/down: 89°/89°
Colour support	16.7mln (sRGB: 100%; NTSC: 72%)
Horizontal Sync	30 - 112kHz
Viewable area W x H	596.7 x 335.7mm, 23.5 x 13.2"
Pixel pitch	0.233mm
Colour	matte, black

02 INTERFACES / CONNECTORS / CONTROLS

Signal input	HDMI x1 (v.1.4) DisplayPort x1 (v.1.2)
USB HUB	x2 (v. 2.0 (DC5V, 500mA))
HDCP	yes
Headphone connector	yes

03 FEATURES

Blue light reducer	yes
Flicker free	yes
Adaptive Sync support	yes
Extra	i-Style colour
OSD languages	EN, DE, FR, ES, IT, RU, JP, CZ, NL, PL, UA
Control buttons	Joystick: (Centre) Power/Menu, Up/Signal Select, Down, Left/Submenu, Right/Volume
User controls	picture adjust (brightness, contrast, ECO, ACR, OD, motion blur reduction, Adaptive Sync), colour settings (i-Style colour, blue light reducer, RGB range, colour temperature, user preset), OSD (OSD H. position, OSD V. position, OSD rotate, OSD time, OSD background, DDC/CI control, display information), language, extra1 (sharpness, video mode adjust, opening logo, power LED), extra 2 (shortcut key, FW version), input select, audio settings (volume, mute audio), reset (reset all)
Speakers	2 x 2W
Convenience	Kensington-lock™ prepared, DDC/CI, DDC2B, Mac OSX

04 MECHANICAL

Display position adjustments	tilt
Tilt angle	20° up; 3° down
VESA mounting	100 x 100mm
Cable management system	yes

05 ACCESSORIES INCLUDED

Cables	power (1.5m), USB (1.5m), HDMI (1.5m), DP (1.8m)
Other	quick start guide, safety guide

06 POWER MANAGEMENT

Power supply unit	internal
Power supply	AC 100 - 240V, 50/60Hz
Power usage	17W default, 0.5W stand by, 0.3W off mode

07 SUSTAINABILITY

Regulations	TCO Certified, CE, TÜV-GS, EAC, VCCI-B, PSE, RoHS support, ErP, WEEE, REACH, UKCA
Energy efficiency class (Regulation (EU) 2017/1369)	D
EPEAT Silver	*registration varies by country, go to www.epeat.net for details
REACH SVHC	above 0.1%: Lead, Lead monoxide, Diboron trioxide

08 DIMENSIONS / WEIGHT

Product dimensions W x H x D	613 x 428.5 x 190mm
Box dimensions W x H x D	688 x 442 x 126mm
Weight (without box)	4.0kg
Weight (with box)	6.2kg
EAN code	4948570126767

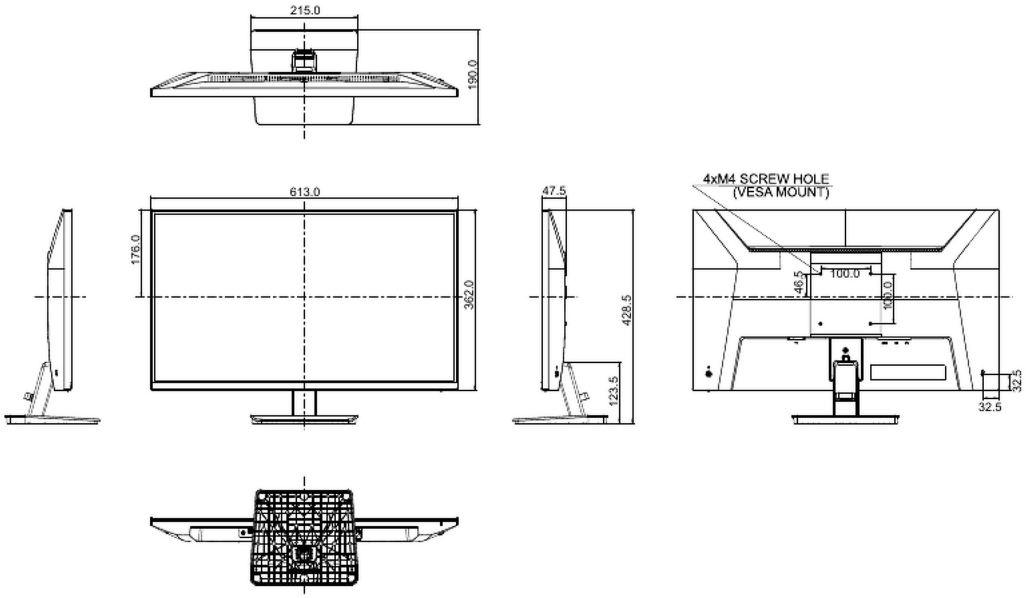
215.0
190.0
613.0
176.0
362.0
47.5
428.5
123.5
4xM4 SCREW HOLE
(VESA MOUNT)
46.5
100.0
100.0
32.5
32.5

GALLERY

iiyama
ProLite
X2793QSU
27"
68.6cm
IPS
2560x1440
SLIM BEZEL
HUB
USB-C
2x2W

iiyama
ProLite
X2793QSU
27"
68.6cm
IPS
2560x1440
SLIM BEZEL
HUB
USB-C
2x2W

iiyama
ProLite
X2793QSU
27"
68.6cm
IPS
2560x1440
SLIM BEZEL
HUB
USB-C
2x2W

iiyama
ProLite
X2793QSU
27"
68.6cm
IPS
2560x1440
SLIM BEZEL
HUB
USB-C
2x2W

iiyama
ProLite
X2793QSU
27"
68.6cm
IPS
2560x1440
SLIM BEZEL
HUB
USB-C
2x2W

ProLite
X2793QSU

HUB
USB-C
2x2W

2x2W

27"
68.6cm
IPS
2560x1440

iiyama

iiyama

All trademarks and registered trademarks acknowledged. E & O E. Specification subject to change without notice. All LCD's comply with ISO-9241-307:2008 in connection with pixel defects. **© IIYAMA CORPORATION. ALL RIGHTS RESERVED**