Get ahead with the 27" G2741QSU-B1 Black Hawk monitor with IPS Panel Technology and 1ms MPRT

Experience outstanding gaming performance with the 27" G2741QSU-B1 featuring sharp QHD resolution. Powered by IPS panel technology, a 144Hz refresh rate, and a lightning-fast 1ms MPRT response time, it delivers smooth, vibrant, and responsive gameplay. NVIDIA G-SYNC Technology eliminates screen tearing for fluid action, while the Black Tuner function enhances visibility in dark scenes.

Available also with height adjustable stand : G-Master GB2741HSU-B1 (1920x1080) and G-Master GB2741QSU-B1 (2560x1440)

144Hz

Rapid refresh rate and frame rate guarantee smooth, blur free and judder free graphics, with lower latency and lag improving response times for fast paced games. Especially suited to the fast pace games like FPS, racers, MOBA and sports where the 144Hz refresh rate delivers the crisp and sharp images needed to raise your game.

1ms

Fast response time is key to ultra-smooth gaming. It reduces ghosting and blurring providing the user with an improved graphic performance.

01 DISPLAY CHARACTERISTICS

Diagonal	27", 68.6cm
Panel	IPS, matte finish
Native resolution	2560 x 1440 @144Hz
Aspect ratio	16:9
Panel brightness	350 cd/m²
Static contrast	1500:1
Advanced contrast	80M:1
Response time (MPRT)	1ms
Viewing zone	horizontal/vertical: 178°/178°, right/left: 89°/89°, up/down: 89°/89°
Colour support	16.7mln
Horizontal Sync	30 - 212kHz
Viewable area W x H	596.7 x 335.6mm, 23.5 x 13.2"
Pixel pitch	0.233mm
Colour	matte, black

02 INTERFACES / CONNECTORS / CONTROLS

Signal input	HDMI x1 (v.2.0, max 2560 x 1440 @144Hz) DisplayPort x1 (v.1.4, max 2560 x 1440 @144Hz)
USB HUB	x2 (v.2.0 DC5V, 500mA)
HDCP	yes
Headphone connector	yes

03 FEATURES

Blue light reducer	yes
Flicker free	yes
Adaptive Sync support	G-SYNC - 2560 x 1440 @48-144Hz, Display Port Only
OSD languages	EN, DE, FR, ES, IT, RU, JP, CZ, NL, PL, UA
Control buttons	Joystick / Power Button: Power / Menu (Center), Up / Input Select, Down, Right / Volume / Mute Audio, Left / Brightness / Adaptive Sync / Night Mode / Motion Blur Reduction / i-Style Colour / ECO
User controls	picture adjust (contrast, brightness, OD, Adaptive Sync, Adv. Contrast, Night Mode, Motion Blur Reduction, Gamma), input select (Auto/Manual, HDMI, DP), audio settings (volume, mute audio), store user settings (user modes), colour settings (6-Axis, colour temperature, user preset, i-style colour, blue light reducer, black tuner), image adjust (sharpness, RGB range, video mode adjust, x-res technology), language, setup menu (OSD h. position, OSD v. position, OSD time, OSD background, OSD rotate, opening logo, power LED, ddc/ci control), display information, reset (reset all)
Speakers	2 x 2W
Convenience	Kensington-lock™ prepared, DDC/CI, DDC2B, Mac OSX

04 MECHANICAL

Display position adjustments	tilt
Tilt angle	22° up; 4° down
VESA mounting	100 x 100mm
Cable management system	yes

05 ACCESSORIES INCLUDED

Cables	power (1.5m), USB (1.5m), HDMI (1.5m)
Other	quick start guide, safety guide

06 POWER MANAGEMENT

Power supply unit	internal
Power supply	AC 100 - 240V, 50/60Hz
Power usage	17W typical, 0.5W stand by, 0.3W off mode

07 SUSTAINABILITY

Regulations	CE, TÜV-Bauart, EAC, VCCI-B, PSE, RoHS support, ErP, WEEE, REACH, UKCA
Energy efficiency class (Regulation (EU) 2017/1369)	D
REACH SVHC	above 0.1%: Lead

08 DIMENSIONS / WEIGHT

Product dimensions W x H x D	613 x 433.5 x 192.5mm
Box dimensions W x H x D	688 x 442 x 126mm
Weight (without box)	4kg
Weight (with box)	5.4kg
EAN code	4948570126873

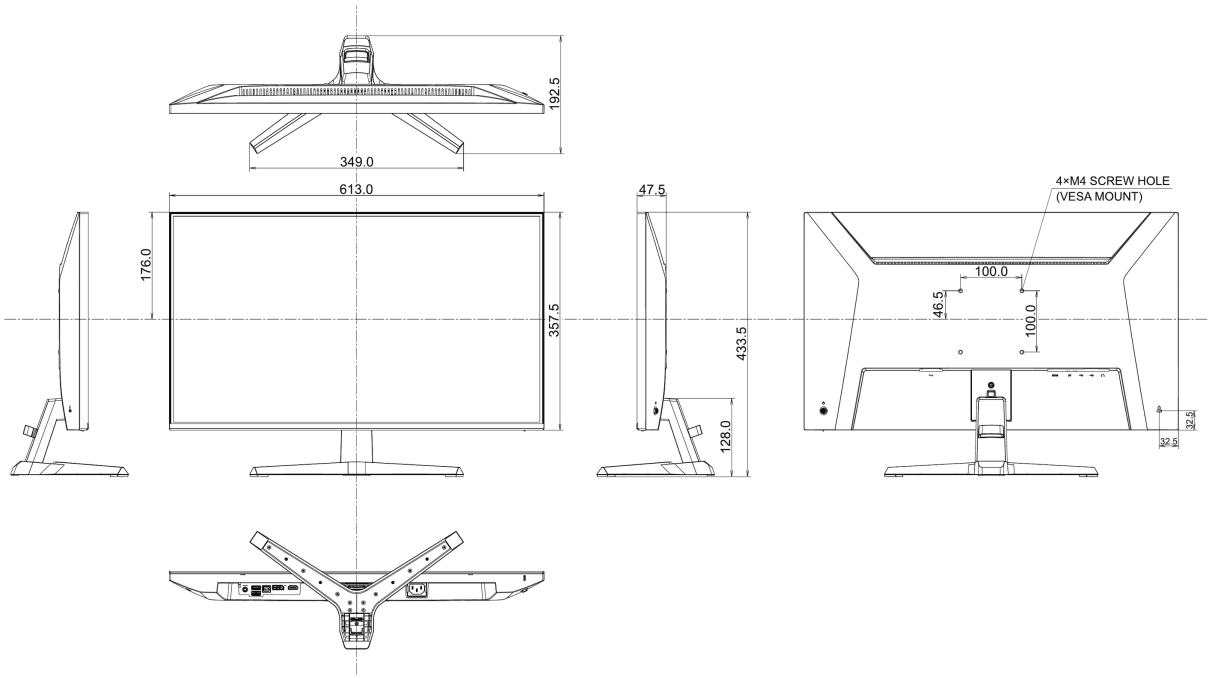

All trademarks and registered trademarks acknowledged. E & O E. Specification subject to change without notice. All LCD's comply with ISO-9241-307:2008 in connection with pixel defects.

© IIYAMA CORPORATION. ALL RIGHTS RESERVED