GB

AIR

DIE GRINDER

65130 - SFAG SPARE PARTS DRAWING

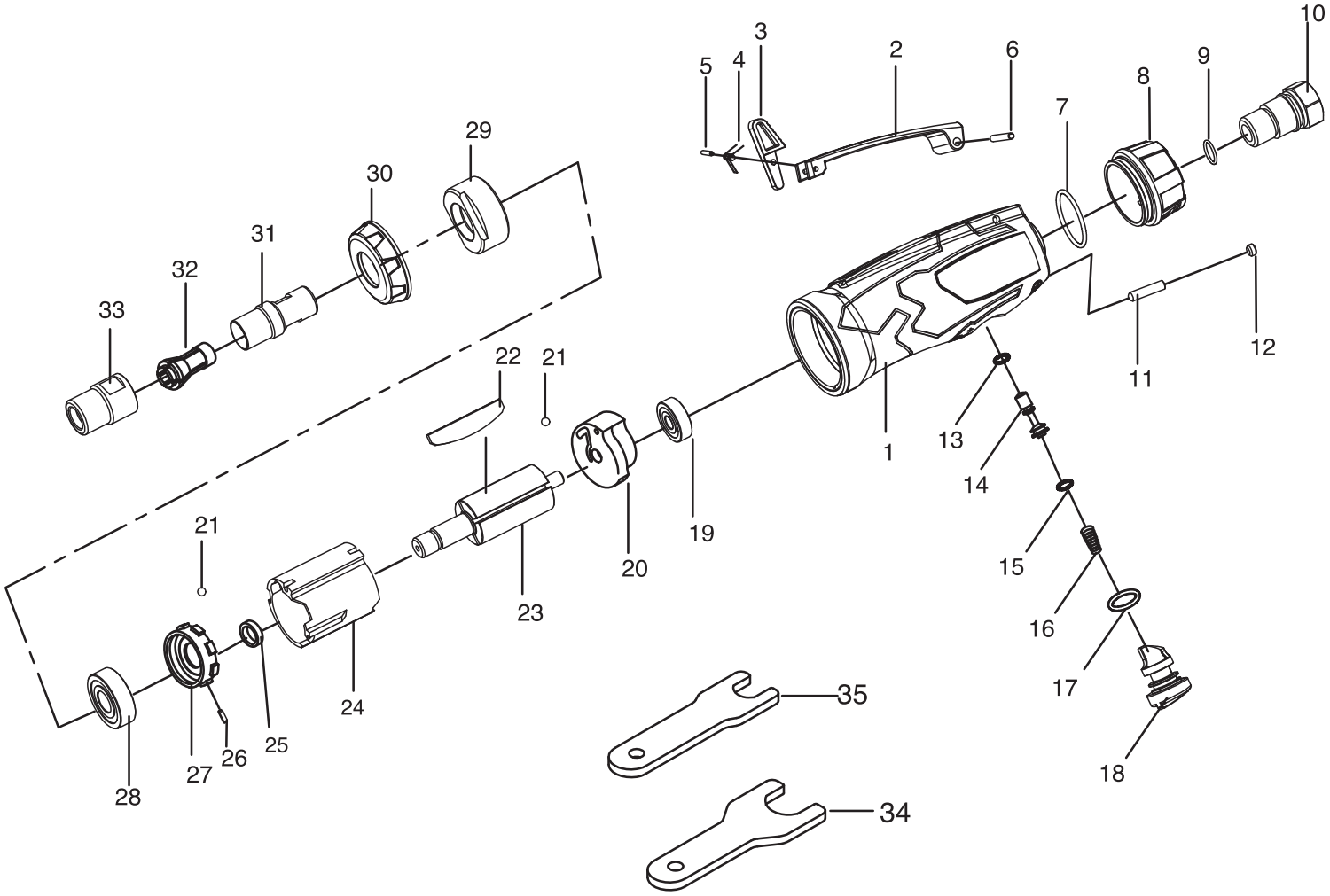

GB

AIR

DIE GRINDER

65130 - SFAG SPARE PARTS DRAWING

KEY No.	PART No.	STOCK No.	DESCRIPTION
01	YSFAG-01	65653	Housing
02	YSFAG-02	65655	Trigger
03	YSFAG-03	65656	Safety latch
04	YSFAG-04	65672	Spring
05	YSFAG-05	65674	Pin
06	YSFAG-06	65675	Pin
07	YSFAG-07	65676	O-ring
08	YSFAG-08	65677	Muffle cover
09	YSFAG-09	65678	O-ring
10	YSFAG-10	65679	Air inlet connector
11	YSFAG-11	65681	Pin
12	YSFAG-13	65685	Screw
13	YSFAG-14	65696	O-ring
14	YSFAG-15	65700	Pin
15	YSFAG-16	65714	O-ring
16	YSFAG-17	65715	Taper spring
17	YSFAG-18	65717	O-ring
18	YSFAG-19	65718	Dial
19	YSFAG-21	65720	Bearing
20	YSFAG-22	65723	Back cylinder head
21	YSFAG-23	65724	Steel ball
22	YSFAG-24	65725	Blade
23	YSFAG-25	65726	Rotor
24	YSFAG-26	65727	Cylinder
25	YSFAG-27	65728	Washer
26	YSFAG-28	65729	Pin
27	YSFAG-29	65731	Front cylinder head
28	YSFAG-30	65732	Bearing
29	YSFAG-31	65733	Locking ring
30	YSFAG-32	65734	Locking Front cylinder head
31	YSFAG-33	65735	Collet holder
32	YSFAG-34	65736	6.0mm collet
33	YSFAG-35	65738	Collet nut
34	YSFAG-36	65740	Large spanner
35	YSFAG-37	65741	Small spanner

KEY No.	PART No.	STOCK No.	DESCRIPTION

Helpline: +44 (0) 23 8049 4344 Sales Desk: +44 (0) 23 8049 4333 General Enquiries: +44 (0) 23 8026 6355 internet: drapertools.com email: sales@drapertools.com

Draper Tools Limited, Hursley Road, Chandler's Ford, Eastleigh, Hampshire. SO53 1YF UK.