# 6000 series

Heavy Duty

UPVC Models

# 6100 series




**6000X**
*No Device*

**6001**
*Tubular Latch*

**6002**
*Ali-Latch*



**6003**
*Lockcase*

**6004**
*Escape Lock*

**6009**
*Night Latch*

**Fire Tested Models**



**6001FT**
*Tubular Latch*
*See Page 21*

**6003FT**
*Lockcase*
*See Page 21*

**The BL6000 series** is a new and unique coding system designed, engineered, manufactured and assembled in our factory. Incorporating a single column of 8 buttons, the 6000 offers a patented high security double button press-coded method of access control. Each digit can be set as a one or two button press and therefore the same digit can be set twice in the code.

With a body width of just 45mm the 6000 is primarily designed to be fitted onto narrow stile door sections be it PVC, aluminum, composite or wood. The free turning handle is permanently clutched to provide no handle resistance until the correct code is entered.

**Available Finishes**

Satin Chrome  Satin Stainless  White

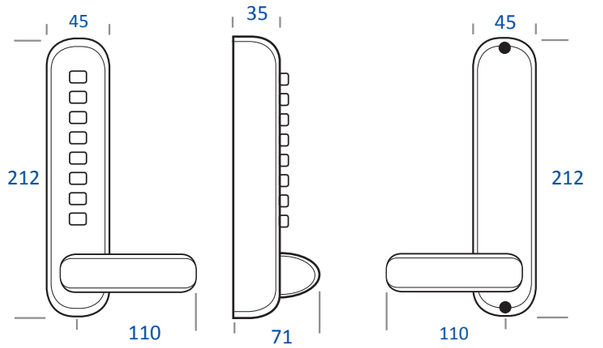


6000 Series Keypad  6000 Series Inside Handle

### Features

- Patented double button press design allowing a greater level of security
- Over 2100 different code combinations
- 70° handle rotation ideal for multi-point locks
- Free turning handle until the correct code is entered
- No tumbler or pins to remove to change code
- 196mm fixing centres
- Optional Free Passage Function
- Narrow housing perfect for PVC, aluminium, composite or wood
- Tested to over 100,000 cycles
- Suitable for external applications


**Available Finishes**

Satin Chrome  White

**6000M**
*No Device*

**6100**
*Retro-Fit*
*No Device*

**The new 6000 Series** is available in two main models; the BL6000M which is supplied with a separate escutcheon allowing it to work with a range of third party lockcases, latches as well as a large majority of multi-point locks.

The BL6100 model incorporates an extension plate fitted behind the keypad and inside handle making it suitable for use with 90 & 92mm centred multi-point locks and covers virtually all existing holes in the door.

The BL6100 offers a perfect retro-fit upgrade from a standard set of lever handles for PVC or composite doors; fitted using the existing fixing centres the unit can be adapted to suit a number of different locking centres.

### Features

- Suitable for use with 90 & 92mm centre multi point locks
- 325mm extension plate fitted behind both keypad & inside handle to cover any existing holes
- 70° handle rotation ideal for multi-point locks
- Over 2100 different code combinations
- Free turning handle until the correct code is entered
- No tumbler or pins to remove to change code
- 195mm fixing centres
- Optional free passage Function
- Narrow housing perfect for PVC, aluminium, composite or wood
- Tested to over 100,000 cycles
- Suitable for external applications

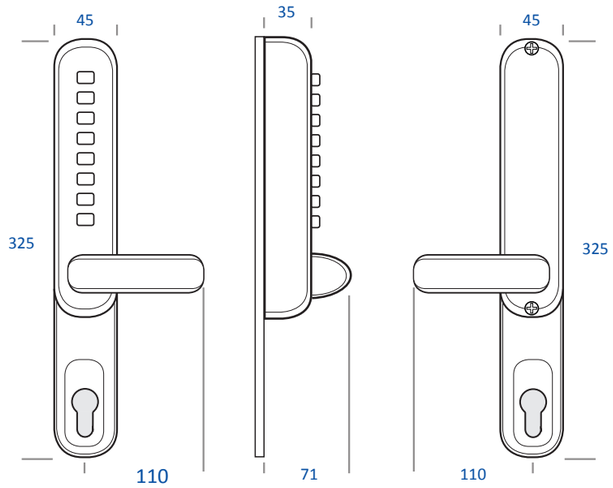


6100 Model Keypad  6100 Model Inside Handle