Overview

Flexible wireless microphones system customized to your use case.

Features

- Wireless system using 1.9 GHz, composed of access point, microphone, and charging station
- The access point supports 8 channels
- Available microphone formfactors: 6” (15 cm) gooseneck, 12” (30 cm) gooseneck, omnidirectional boundary, and cardioid directional boundary
- Approximately 20 hours of continuous microphone operation time using the included Li-ion battery
- Standard network audio support for “Dante”
- Utilizes one PoE+ network cable connection avoiding wiring problems and enabling audio control via Dante
- The Web UI Setup Wizard allows for effortless configuration, microphone pairing, audio routing, and other system management

Specifications

General Specifications

RM-WDR

Description		Wireless Microphone
Colour		Black
Dimensions (W x D x H)		W 89.0 mm x D 89.0 mm x H 26.0 mm (including rubber feet)
Weight		130 g (including battery)
Directivity		Unidirectional
Power Requirements		Rechargeable Li-ion Battery 3.6 V 2350 mA/h
Maximum Power Consumption		5.0 V 0.7 A
Battery	Talk Time	Approximately 20 hours (power on)
	Standby Time	7 days
	Charge Time	Full charging: 5 hours, 80% charging: 3 hours
In Operation	Temperature	0°C - 40°C
	Humidity	20% - 85% (no condensation)
In Charging	Temperature	5°C - 40°C
	Humidity	20% - 85% (no condensation)
Storage	Temperature	-20°C - 60°C
	Humidity	10% - 90% (no condensation)
Indicators		Microphone indicator (3 colours) x 1, Battery indicator (3 colours) x 1
Buttons		Microphone button x 1, Battery button x 1, PAIR button x 1
Connectors		USB Type C (for battery charging) x 1, Charger I/F (4pin) x 1
Accessories		Battery (RM-WBT) x 1, Owner's manual x 1
Options		Replacement Battery RM-WBT

RM-WOM

Description		Wireless Microphone
Colour		Black
Dimensions (W x D x H)		W 89.0 mm x D 89.0 mm x H 26.0 mm (including rubber feet)
Weight		126 g (including battery)
Directivity		Omnidirectional
Power Requirements		Rechargeable Li-ion Battery 3.6 V 2350 mA/h
Maximum Power Consumption		5.0 V 0.7 A
Battery	Talk Time	Approximately 20 hours (power on)
	Standby Time	7 days
	Charge Time	Full charging: 5 hours, 80% charging: 3 hours
In Operation	Temperature	0°C - 40°C
	Humidity	20% - 85% (no condensation)
In Charging	Temperature	5°C - 40°C
	Humidity	20% - 85% (no condensation)
Storage	Temperature	-20°C - 60°C
	Humidity	10% - 90% (no condensation)
Indicators		Microphone indicator (3 colours) x 1, Battery indicator (3 colours) x 1
Buttons		Microphone button x 4, Battery button x 1, PAIR button x 1
Connectors		USB Type C (for battery charging) x 1, Charger I/F (4pin) x 1
Accessories		Battery (RM-WBT) x 1, Owner's manual x 1
Options		Replacement Battery RM-WBT

Specifications

RM-WGL

Description		Wireless Microphone
Colour		Black
Dimensions (W x D x H)		W 89.0 mm x D 89.0 mm x H 308.4 mm (including rubber feet and to center of gooseneck mic)
Weight		152 g (including battery)
Directivity		Unidirectional
Power Requirements		Rechargeable Li-ion Battery 3.6 V 2350 mA/h
Maximum Power Consumption		5.0 V 0.7 A
Battery	Talk Time	Approximately 20 hours (power on)
	Standby Time	7 days
	Charge Time	Full charging: 5 hours, 80% charging: 3 hours
In Operation	Temperature	0°C - 40°C
	Humidity	20% - 85% (no condensation)
In Charging	Temperature	5°C - 40°C
	Humidity	20% - 85% (no condensation)
Storage	Temperature	-20°C - 60°C
	Humidity	10% - 90% (no condensation)
Indicators		Microphone indicator (3 colours) x 1, Ring indicator (3 colours) x 1, Battery indicator (3 colours) x 1
Buttons		Microphone button x 1, Battery button x 1, PAIR button x 1
Connectors		USB Type C (for battery charging) x 1, Charger I/F (4pin) x 1
Accessories		Battery (RM-WBT) x 1, Owner's manual x 1
Options		Replacement Battery RM-WBT

RM-WGS

Description		Wireless Microphone
Colour		Black
Dimensions (W x D x H)		W 89.0 mm x D 89.0 mm x H 171.2 mm (including rubber feet and to center of gooseneck mic)
Weight		140 g (including battery)
Directivity		Unidirectional
Power Requirements		Rechargeable Li-ion Battery 3.6 V 2350 mA/h
Maximum Power Consumption		5.0 V 0.7 A
Battery	Talk Time	Approximately 20 hours (power on)
	Standby Time	7 days
	Charge Time	Full charging: 5 hours, 80% charging: 3 hours
In Operation	Temperature	0°C - 40°C
	Humidity	20% - 85% (no condensation)
In Charging	Temperature	5°C - 40°C
	Humidity	20% - 85% (no condensation)
Storage	Temperature	-20°C - 60°C
	Humidity	10% - 90% (no condensation)
Indicators		Microphone indicator (3 colours) x 1, Ring indicator (3 colours) x 1, Battery indicator (3 colours) x 1
Buttons		Microphone button x 1, Battery button x 1, PAIR button x 1
Connectors		USB Type C (for battery charging) x 1, Charger I/F (4pin) x 1
Accessories		Battery (RM-WBT) x 1, Owner's manual x 1
Options		Replacement Battery RM-WBT

Specifications

RM-WAP-16

Description		Microphone Access Point
Colour		White (paintable surface)
Dimensions (W x D x H)		W 171.2 mm x D 172.5 mm x H 42.8 mm
Weight		812 g (including mounting bracket)
Power Requirements		PoE Class 3 (IEEE 802.3af)
Maximum Power Consumption		48 V 0.2 A
In Operation	Temperature	0°C - 40°C
	Humidity	20% - 85% (no condensation)
Storage	Temperature	-20°C - 60°C
	Humidity	10% - 90% (no condensation)
Indicators		Power indicator (3 colours) x 1, Status indicator (3 colours) x 1
Buttons		Reset button x 1
Connectors		RJ-45
Mount		Wall mount, Ceiling mount (with bracket), Flat placing
Maximum Device Number with RM-CR		RM-CR V2.8 or earlier: 1 RM-CR V3.0 or later: 4
Accessories		Owner's manual x 1, Mounting bracket x 1 *Screw for mounting bracket or safety wire are not included

RM-WAP-8

Description		Microphone Access Point
Colour		White (paintable surface)
Dimensions (W x D x H)		W 171.2 mm x D 172.5 mm x H 42.8 mm
Weight		650 g (including mounting bracket)
Power Requirements		PoE Class 3 (IEEE 802.3af)
Maximum Power Consumption		48 V 0.2 A
In Operation	Temperature	0°C - 40°C
	Humidity	20% - 85% (no condensation)
Storage	Temperature	-20°C - 60°C
	Humidity	10% - 90% (no condensation)
Indicators		Power indicator (3 colours) x 1, Status indicator (3 colours) x 1
Buttons		Reset button x 1
Connectors		RJ-45
Mount		Wall mount, Ceiling mount (with bracket), Flat placing
Maximum Device Number with RM-CR		RM-CR V2.8 or earlier: 2 RM-CR V3.0 or later: 8
Accessories		Owner's manual x 1, Mounting bracket x 1 *Screw for mounting bracket or safety wire are not included

Specifications

RM-WCH-8

Description		Microphone Charger
Colour		Black
Dimensions (W x D x H)		W 304.0 mm x D 188.0 mm x H 41.5 mm (including rubber feet)
Weight		800 g
Material		Plastic
Power Requirements		DC IN (16 V, 2.4 A)
Maximum Power Consumption		16.0 V 2.0 A
In Operation	Temperature	0°C - 40°C
	Humidity	20% - 85% (no condensation)
In Charging	Temperature	5°C - 40°C
	Humidity	20% - 85% (no condensation)
Storage	Temperature	-20°C - 60°C
	Humidity	10% - 90% (no condensation)
Indicators		ACTIVATE indicator (3 colours) x 1
Buttons		ACTIVATE button x 1, PAIR button x 1
Connectors		DC IN 16V
Accessories		Owner's manual x 1, AC adapter x 1, Power cable x 1 (for Japan and USA), x 3 (for Europe)

RM-WBT

Description		Replacement Battery
Colour		Black
Dimensions (W x D x H)		W 34.95 mm x D 52.5 mm x H 11.15 mm
Weight		42 g
Voltage		3.6 V
Nominal Capacity		2350 mA/h
Maximum Charge Current		1.59 A
Maximum Charge Voltage		4.20 V
Maximum Discharge Current		2.30 A
In Operation	Temperature	0°C - 40°C
	Humidity	20% - 85% (no condensation)
Storage	Temperature	-20°C - 60°C
	Humidity	10% - 90% (no condensation)
Accessories		Safety brochure x 1

Specifications

Network Specifications

RM-WAP-16/RM-WAP-8

Ethernet	Dante, Remote Control, Web UI, PoE
Cable Requirements	CAT5e or higher (STP)

Audio Specifications

Frequency Response		160 Hz - 16 kHz
Sampling Rate		48 kHz
Bit Depth		24 bit
Latency	RM-WDR/RM-WOM	30 ms - 35 ms nominal (without signal processing in High Quality mode) 110 ms nominal (with signal processing in High Quality mode)
	RM-WGL/RM-WGS	30 ms - 35 ms nominal (without signal processing in High Quality mode) 110 ms nominal (with signal processing in High Quality mode)
Audio I/O	Dante	RM-WAP-16: 1 in/16 out RM-WAP-8: 1 in/8 out
Maximum Input Level of SPL (0 dBFS)	RM-WDR	100.2 dB SPL
	RM-WOM	99.4 dB SPL
	RM-WGL	106.2 dB SPL
	RM-WGS	106.2 dB SPL
Self Noise	RM-WDR	-24.7 dBA SPL
	RM-WOM	-23.0 dBA SPL
	RM-WGL	-19.3 dBA SPL
	RM-WGS	-19.3 dBA SPL
SNR (Ref. 94 dB SPL at 1 kHz)	RM-WDR	118.7 dBA
	RM-WOM	117.0 dBA
	RM-WGL	113.3 dBA
	RM-WGS	113.3 dBA
Sensitivity	RM-WDR	-6.2 dBFS/Pa
	RM-WOM	-5.4 dBFS/Pa
	RM-WGL	-12.2 dBFS/Pa
	RM-WGS	-12.2 dBFS/Pa
Dynamic Range	RM-WDR	124.9 dBA
	RM-WOM	122.4 dBA
	RM-WGL	125.5 dBA
	RM-WGS	125.5 dBA
Signal Processing		Adaptive Echo Canceller, Noise Reduction, Dereverberation, Auto Gain Control, Parametric EQ, Output Gain Adjustment, Auto Mixer (V3.0 or later)

Wireless Specifications

Radio Method	1.9 GHz DECT standard
Radio Frequency Range	USA, Canada: 1920.0 MHz - 1930.0 MHz Japan: 1893.5 MHz - 1906.1 MHz EU, Australia, New Zealand, Norway, UK, Hong Kong, UAE, Singapore: 1880.0 MHz - 1900.0 MHz
Maximum RF Power Level (EIRP)	USA, Canada: 20.1 dBm Japan: 27.0 dBm EU, Australia, New Zealand, Norway, UK, Hong Kong: 25.9 dBm UAE, Singapore: 23.8dBm
Maximum Coverage Distance	50 m (depends on the usage environment)
Encryption	AES (256-bit)

Dimensions

Unit: mm (inch)

RM-WDR

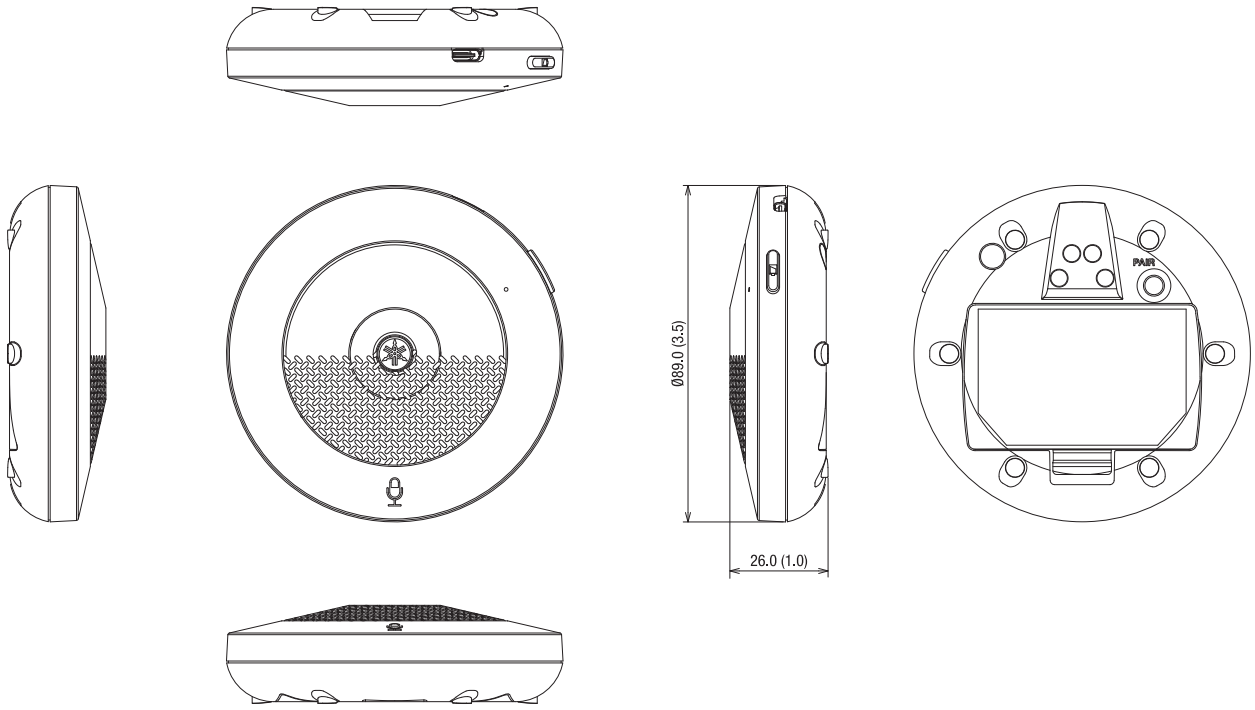

Dimensions

2/6

Unit: mm (inch)

RM-WOM

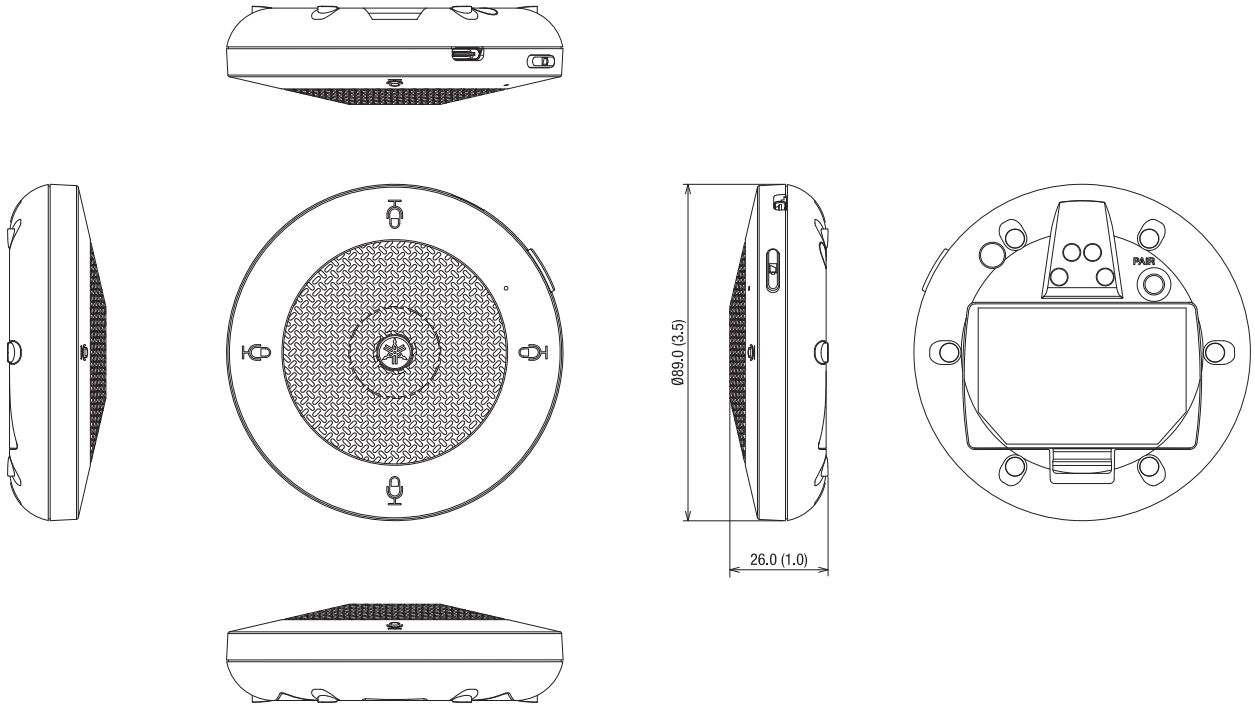

Dimensions

Unit: mm (inch)

RM-WGL

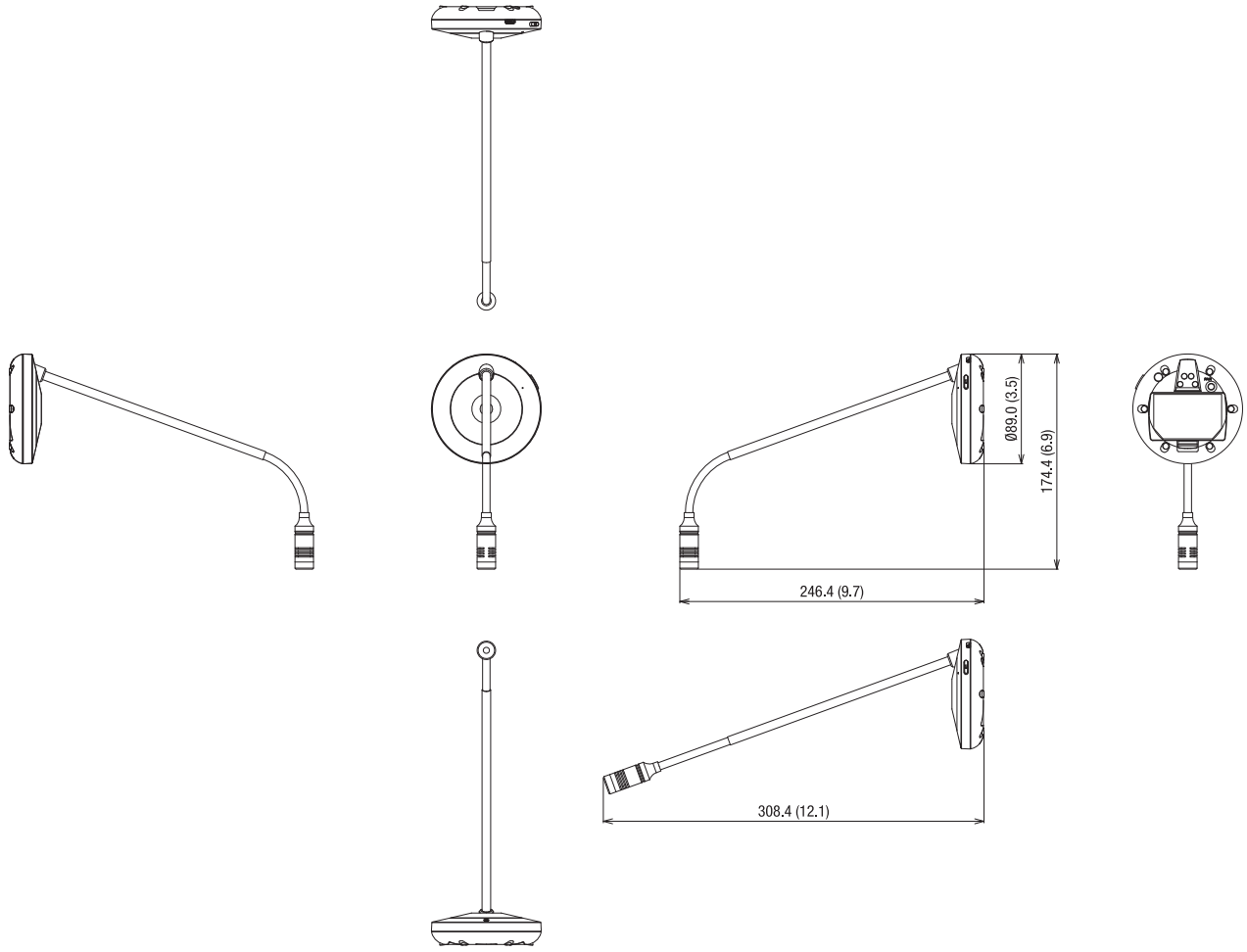

Dimensions

Unit: mm (inch)

RM-WGS

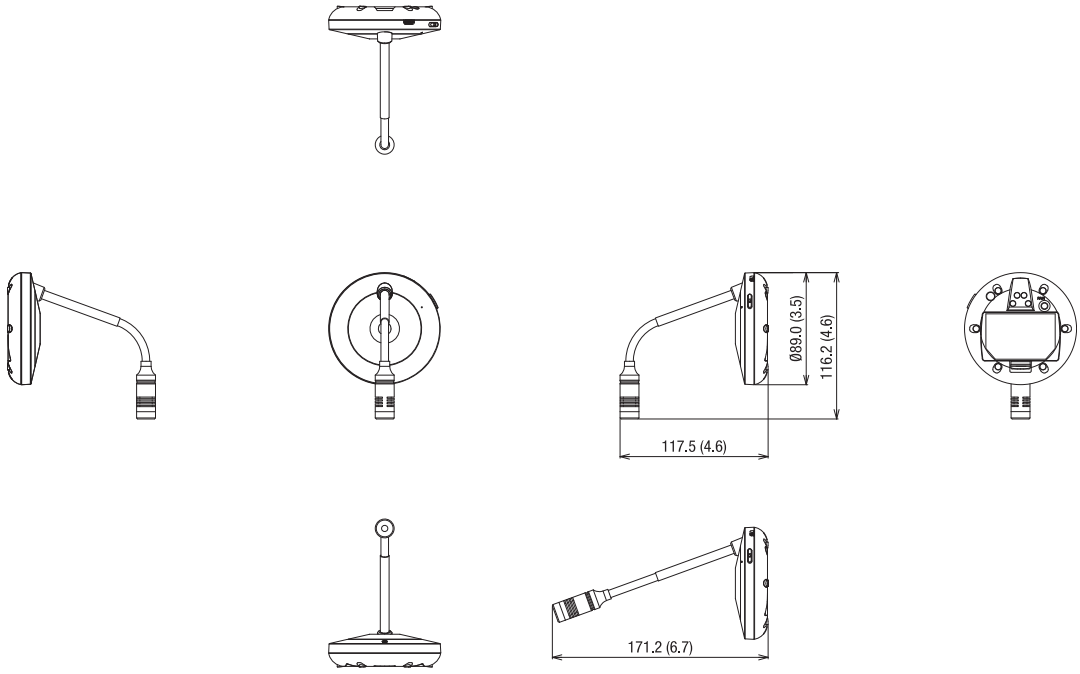

Dimensions

Unit: mm (inch)

RM-WAP-16/RM-WAP-8

Body

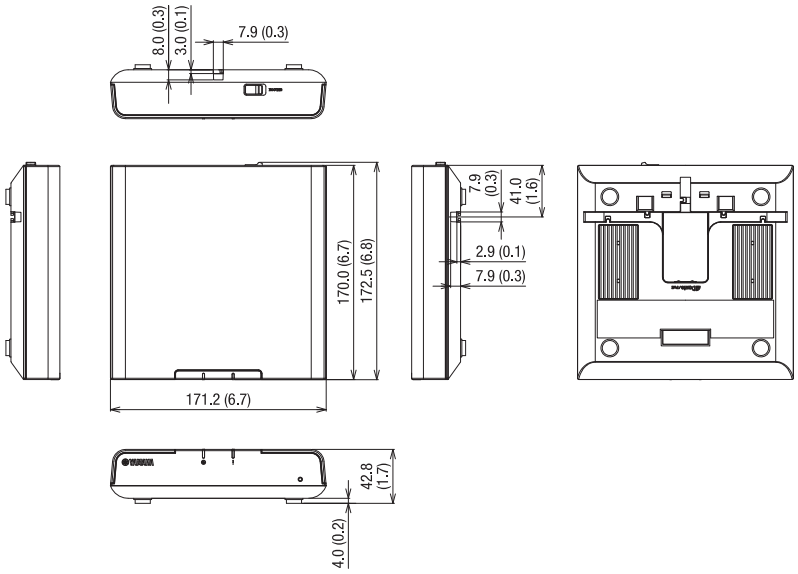

Bracket

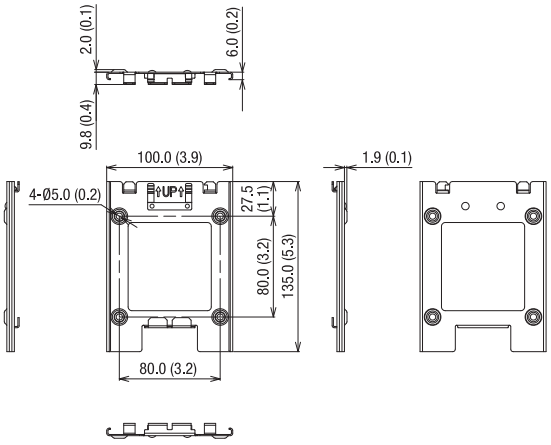

Body + Bracket

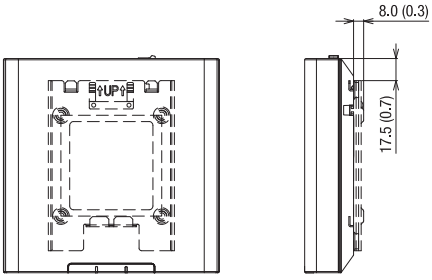

Dimensions

Unit: mm (inch)

RM-WCH-8

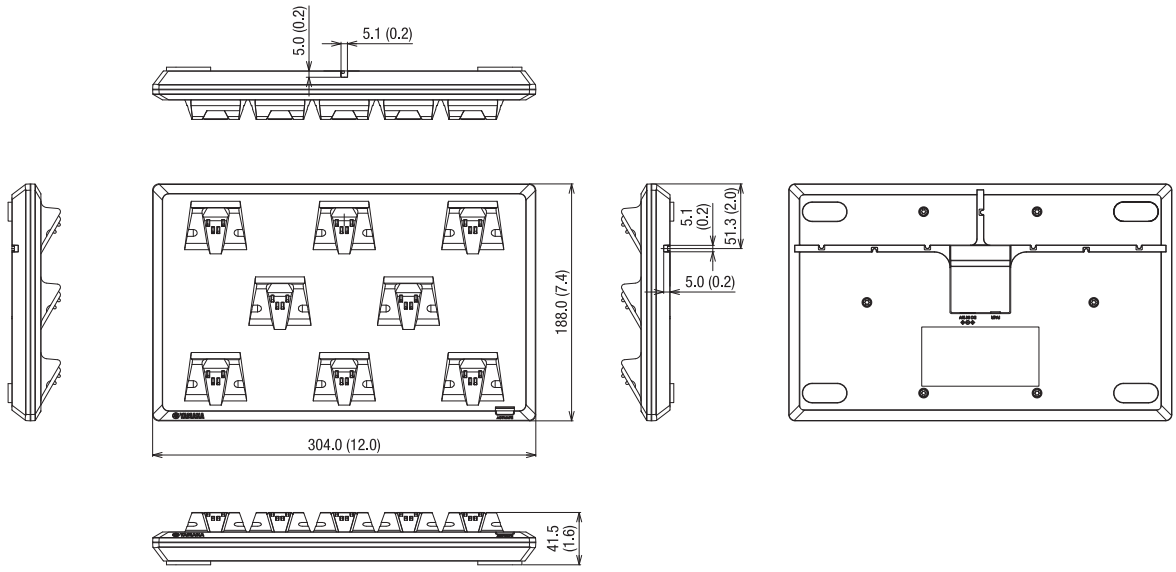

Frequency Response

RM-WDR

LINEAR

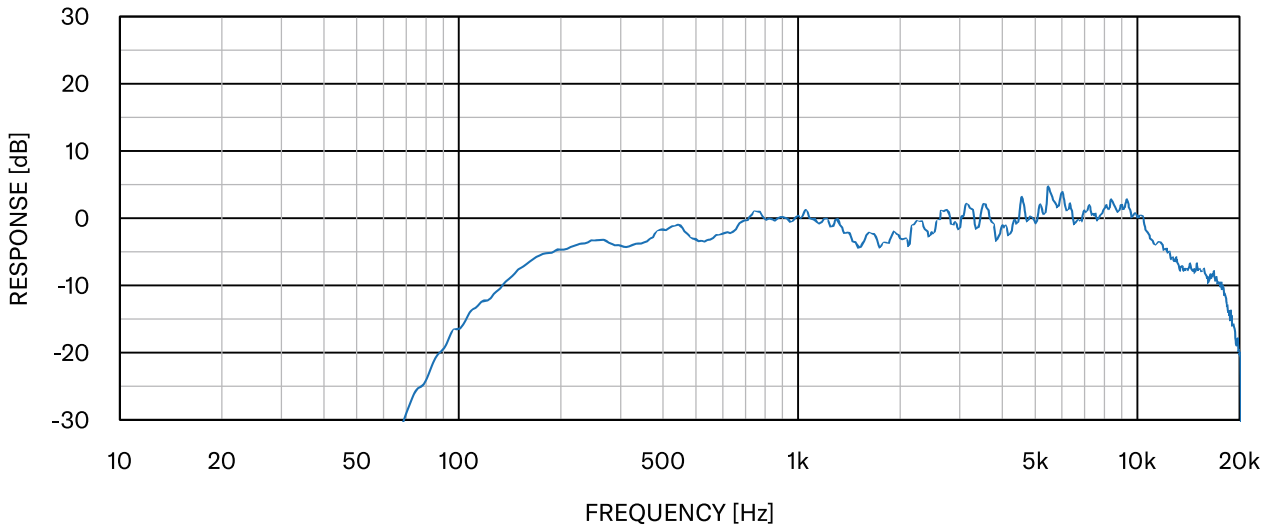

1/3 octave band

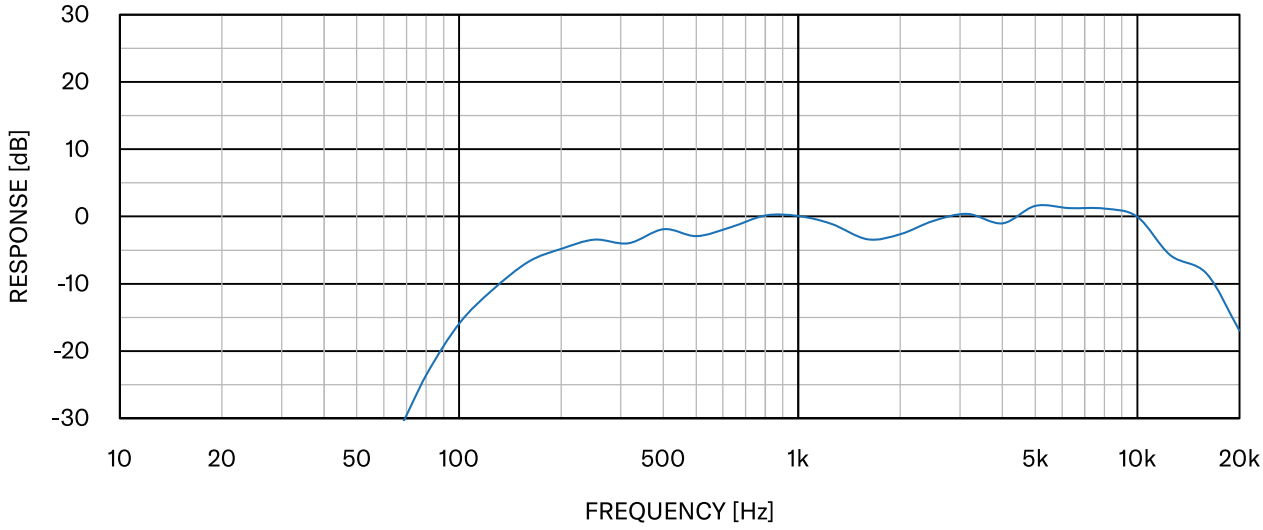

Frequency Response

RM-WOM

LINEAR

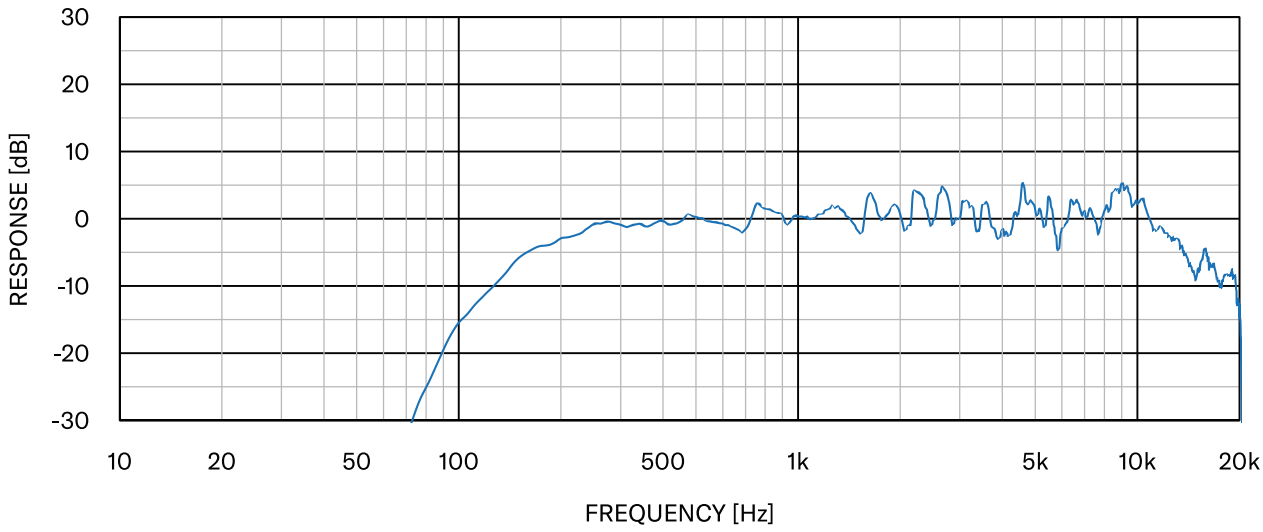

1/3 octave band

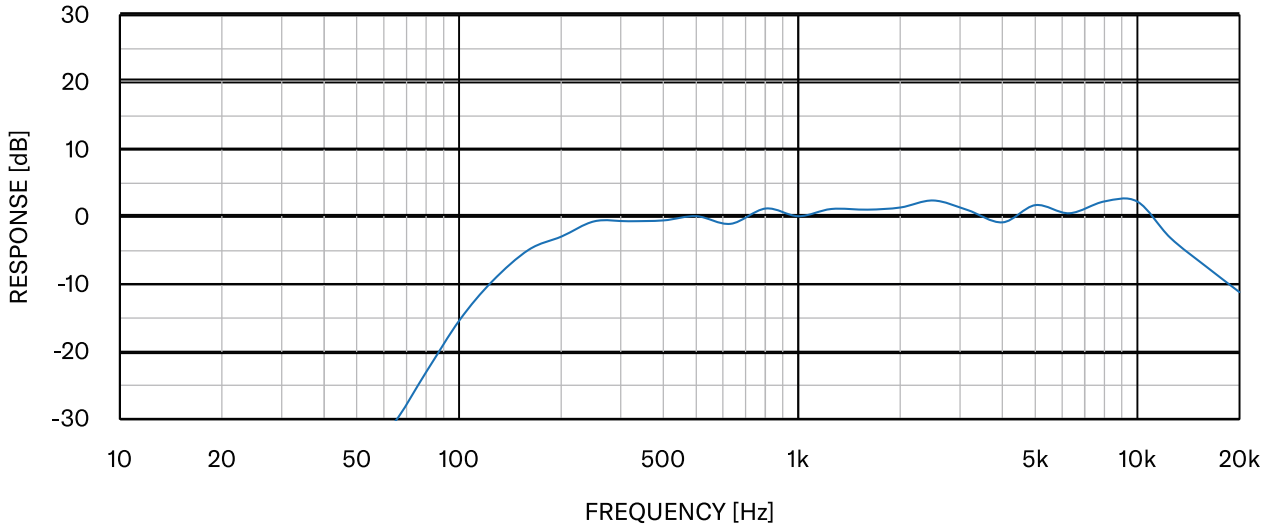

Frequency Response

RM-WGL

LINEAR

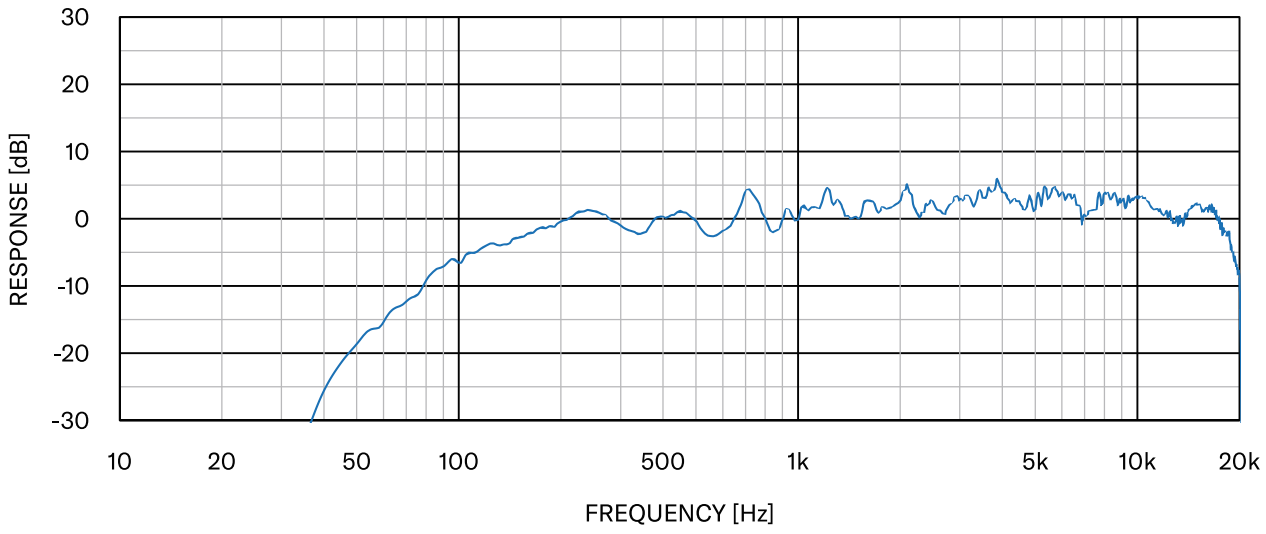

1/3 octave band

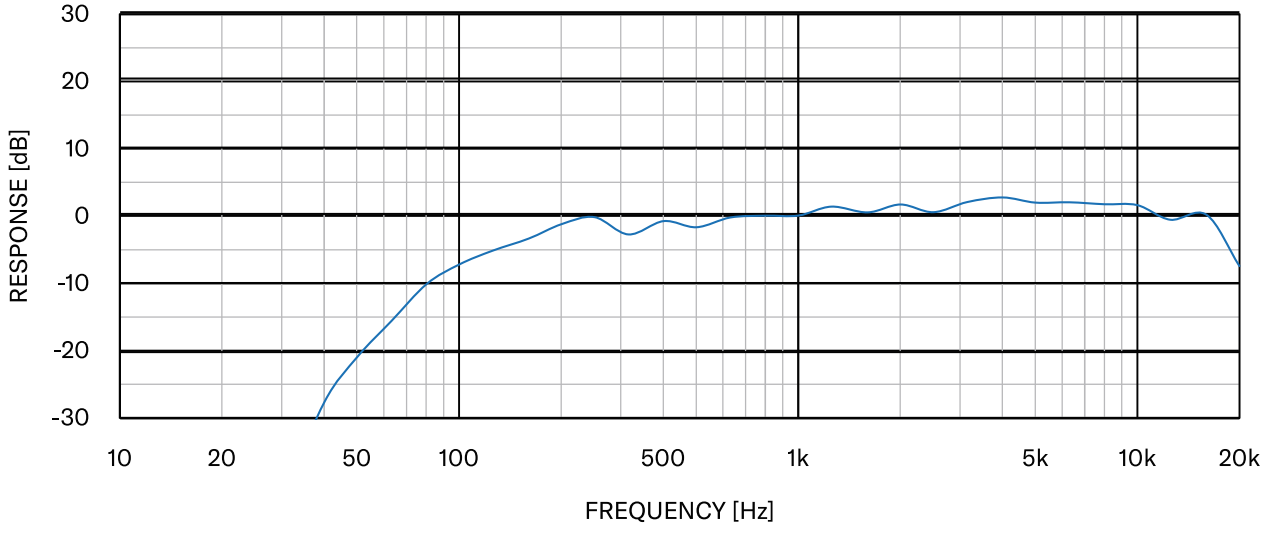

Frequency Response

RM-WGS

LINEAR

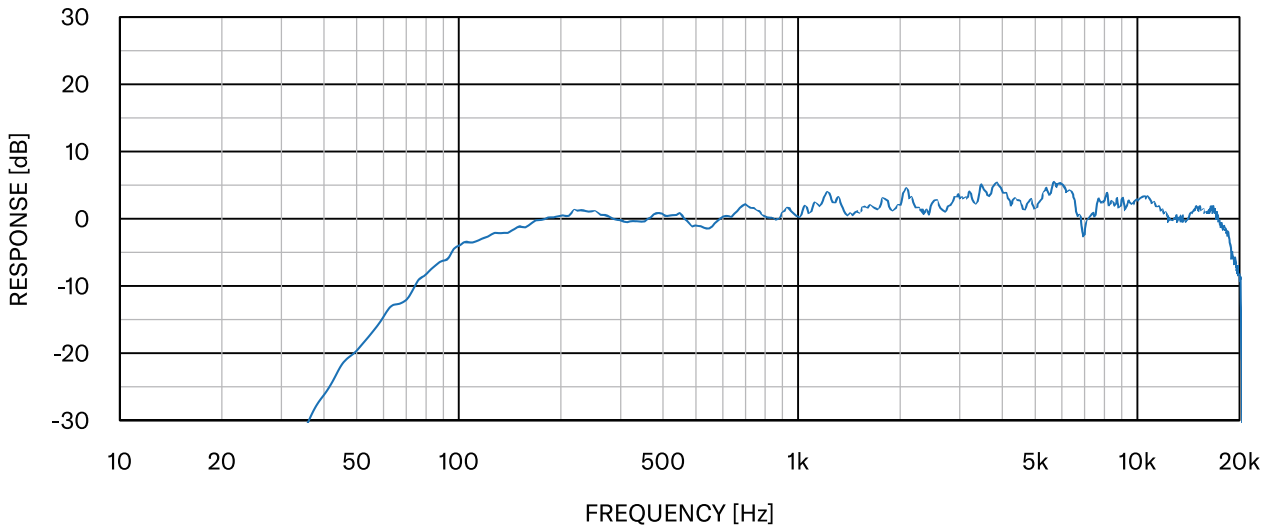

1/3 octave band

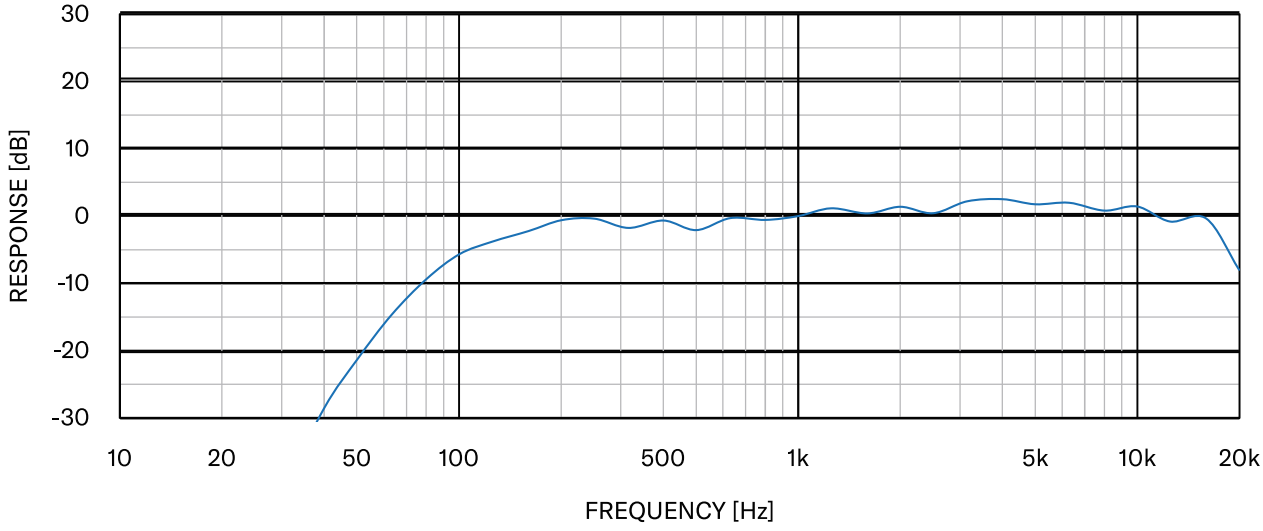

Directional Characteristics

RM-WDR

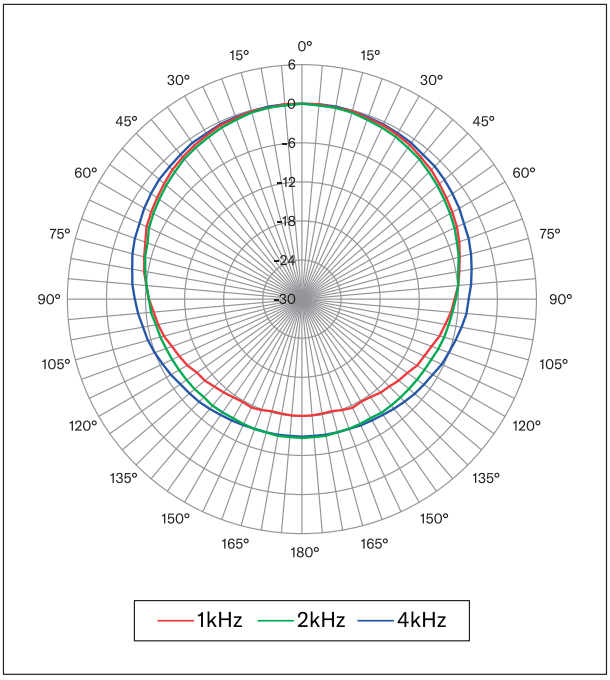

RM-WOM

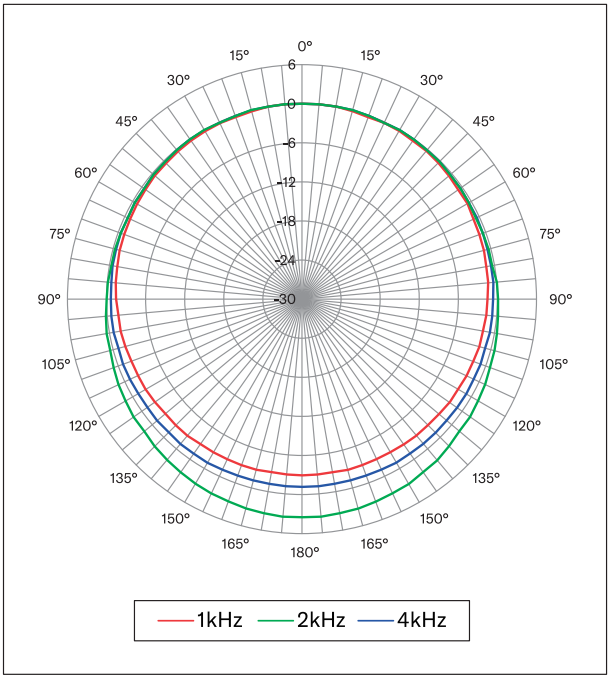

RM-WGL

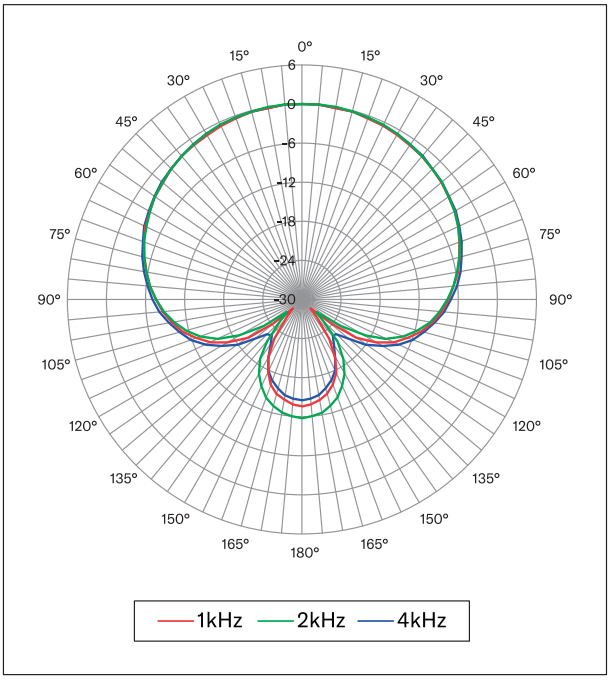

RM-WGS

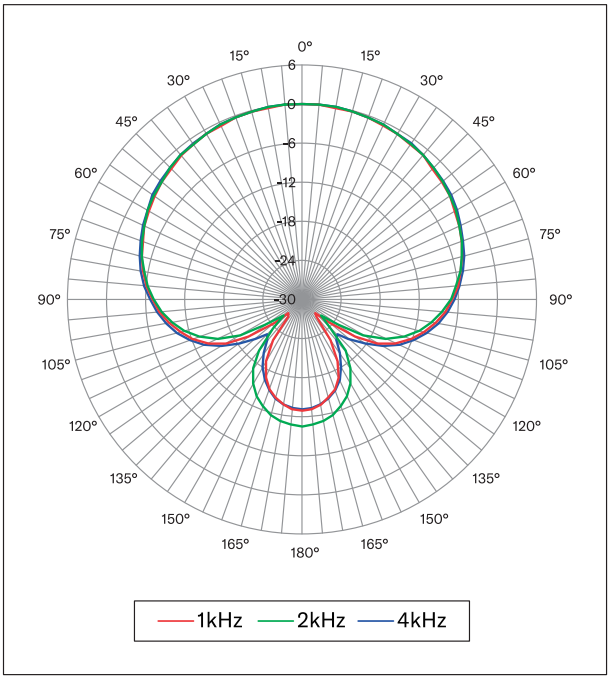

*All information subject to change without notice.
*All trademarks and registered trademarks are property of their respective owners.
Created in January, 2026

YAMAHA CORPORATION
P.O.BOX 1, Hamamatsu Japan