316 Stainless Steel Twin Ferrule Imperial Tube Fittings

Weld Union, Connectors

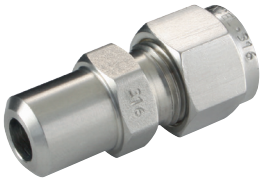

THIS DRAWING IS A SOLE PROPERTY OF PANAM ENGINEERS LTD & SHOULD NOT BE COPIED OR COMMUNICATED IN ANY FORMAT WITHOUT WRITTEN PERMISSION OF PANAM ENGINEERS LTD.

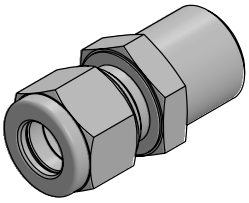

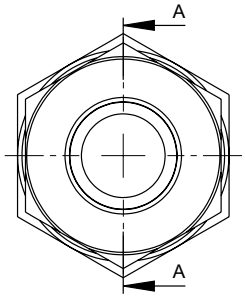

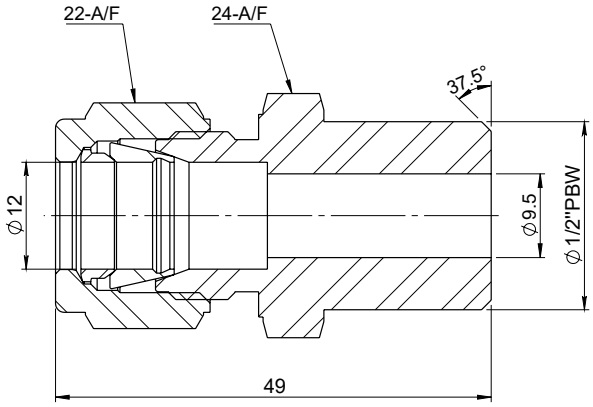

SECTION A-A

NOTES:-
1. ALL DIMENSIONS ARE IN MM. UNLESS SPECIFIED.
2. UNSPECIFIED GEN TOL. : ±0.5mm MAX.
3. UNSPECIFIED GEN ANG. TOL. : ±1° MAX.
4. UNSPECIFIED ASLY. TOL. : ±2mm MAX.
5. MATERIAL: ASTM A479 SS316.

TITLE:-	MALE PIPE WELD CONNECTOR 12MM OD x 1/2" PIPE BUTT WELD	
DRN.	A. P.	Weight:-113.16gms.
CHD.	A. S.	DATE:- 20-Dec-22
APPD.	S. K.	DWG NO.- PMWC-M12-8PBW-SS

PANAM ENGINEERS LTD.
GUJARAT - INDIA

SCALE - NTS	SHEET 1 OF 1	A4	