Hydraulic Hand Pumps

PPSE 12-15

with release lever single acting pump for a single acting cylinder
with 1,5 lt tank

Specifications:

- White zinc plated steel body
- Piston treated with Niploy
- White zinc plated external parts
- Standard colour blue

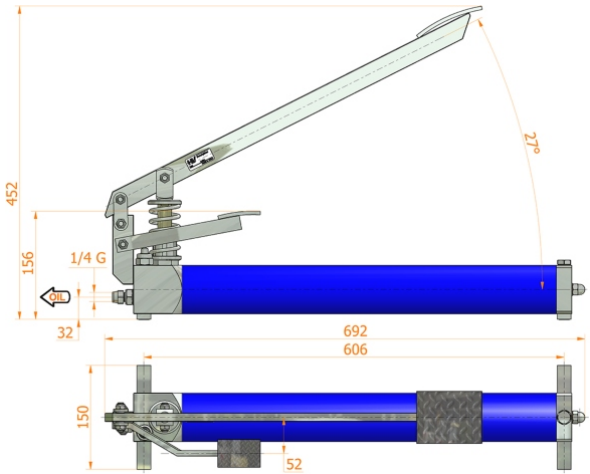

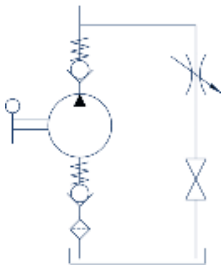

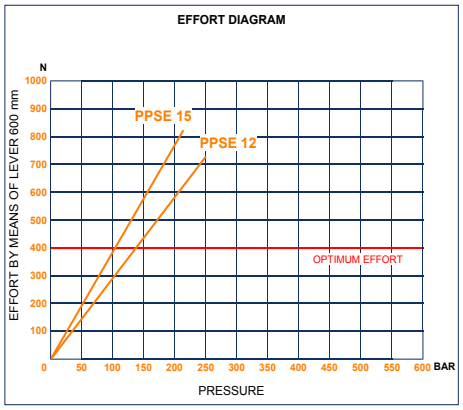

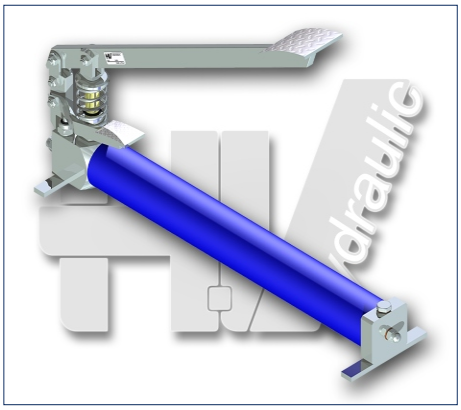

DISPLACEMENT cm³	A mm	B mm	C mm	D °	E °	ACTUAL DISPLACEMENT cm³	PRESSURE BAR		MASS KG	CODE
							OPTIMAL	MAX		
12	--	--	--	--	--	11,445	140	250	10,000	6089.0000
15	--	--	--	--	--	14,130	110	220	10,000	6090.0000