Push-in fittings and connectors QS

★/☆	Festo core product range Covers 80% of your automation tasks	★	Generally ready for shipping ex works in 24 hours Held in stock in 13 service centres worldwide More than 2200 product
Worldwide:	Always in stock	☆	Generally ready for shipping ex works in 5 days Assembled for you in 4 service centres worldwide Up to 6 x 10^{12} variants per product series
Superb:	Festo quality at an attractive price		
Easy:	Reduces procurement and storing complexity		

Look for the star!

Push-in fittings QS

Features

Application

Effortless selection of the right fitting. Festo offers a secure solution for every connection. The convenient push-in fitting system includes well over 1000 types of standard and function fittings.

Summary of tubing/fitting combinations

Applications	Fitting	Tubing	Description
Standard	QS	PEN	Suitable for a wide range of tasks and attractively priced. Flexible thanks to high levels of resistance, easy to install thanks to optimised bending radii. High level of abrasion resistance in dynamic applications.
	QS	PUN	Maximum flexibility in standard applications thanks to an extremely wide range of options for combining the different types.
	QS	PAN	Meets all requirements, even for standard applications with increased pressure and temperature ranges.
High pressures	NPQM	PAN-MF	Meets DIN standard 73378: ideal for use in mobile pneumatics. Suitable for increased temperature ranges combined with high pressure ranges.
	NPQH	PAN-R	Powerful in pressure ranges up to 20 bar, for example in applications with the pressure booster DPA.
Resistant to chemicals, food safe and hydrolysis resistant	NPQP	PLN	Resistant to cleaning agents, FDA compliant and economical. Can be used instead of the combination with stainless steel fittings.
	NPKA	PUN-H	Hydrolysis resistant and suitable for water applications. Combination suitable for use in clean rooms, FDA compliant and corrosion resistant as it is made of 100% polymer. Very easy to install thanks to the “one click principle”.
	NPQH	PFAN/PTFEN	For high temperatures up to 150 °C. Food safe, FDA compliant and resistant to cleaning agents.
	NPCK	PFAN/PTFEN	Easy to clean thanks to the union nut’s edge-free design. Maximum resistance to corrosion (CRC 4) and FDA compliant. Suitable for a wide range of media.
	CRQS	PFAN/PTFEN	Maximum resistance to corrosion (CRC 4) and to aggressive acids and alkalis.
Resistant to chemicals and hydrolysis resistant	NPQR	PFAN/PTFEN	Optimised design, reduction in edges where dirt can collect – all at an attractive price. For high temperatures up to 150 °C. Pressure range up to 16 bar. Highest level of corrosion resistance (CRC 4).
Antistatic	NPQM	PUN-CM	Antistatic tubing plus solid metal fitting: maximum protection for electric and electronic components.
Flame retardant	NPQM	PUN-V0	Very safe in areas where there is a risk of fire thanks to flame-retardant properties. The tubing has been tested to DIN 5510-2.
Resistant to welding spatter	NPQH	PUN-V0-C	Ideal for applications involving welding spatter. Reliable thanks to a tubing wall thickness of 2 mm for all diameters.
	QS-V0	PAN-V0	Safe even in the close vicinity of welding spatter thanks to the double-walled tubing with special fitting.

Push-in fittings QS

Features

Push-in fittings product range

QSM, mini series

Technical data ➔ Internet: qsm

Miniature push-in fittings for maximum component density in confined spaces. For pneumatic applications with a temperature range up to 80 °C and a pressure range up to 14 bar.
Tubing outside diameters of 2, 3, 4 and 6 mm with connecting threads M3, M5, M6, M7, R⅛ and G⅛.

QS, standard series

Technical data ➔ Internet: qs

Wide selection of push-in fittings for pneumatic applications with a temperature range up to 80 °C and a pressure range up to 14 bar.
Tubing outside diameters of 4, 6, 8, 10, 12, 16 and 22 mm with connecting threads R⅛ ... R½ and G⅛ ... G¾.

CRQS, stainless steel

Technical data ➔ Internet: crqs

Stainless steel push-in fitting. High corrosion resistance CRC 4 and chemical resistance with approval for use in the food and packaging industry. For pneumatic applications with a temperature range up to 120 °C and a pressure range up to 10 bar.
Tubing outside diameters of 4, 6, 8, 10, 12 and 16 mm with connecting threads M5 and R⅛ ... R½.

QS-V0, resistant to welding spatter

Technical data ➔ Internet: qs-v0

Flame-retardant push-in fitting for use in all areas where there is a risk of fire, for example welding systems in the automotive industry and in the construction industry. For pneumatic applications with a temperature range up to 60 °C and a pressure range up to 10 bar.
Tubing outside diameters of 4, 6, 8, 10 and 12 mm with connecting threads R⅛ ... R½ and G⅛ ... G½.

NPQH

Technical data ➔ Internet: npqh

Solid metal push-in fitting made of chemically nickel-plated brass. High corrosion resistance CRC 3 and chemical resistance. For pneumatic applications with a temperature range up to 150 °C and a pressure range up to 20 bar.
Tubing outside diameters of 4, 6, 8, 10, 12 and 14 mm with connecting threads M5, M7 and G⅛ ... G½.

NPQM

Technical data ➔ Internet: npqm

Attractively priced metal push-in fitting for pneumatic applications with a temperature range up to 70 °C and a pressure range up to 16 bar.
Tubing outside diameters of 3, 4, 6, 8, 10, 12 and 14 mm with connecting threads M5, M7 and G⅛ ... G½.

NPQP

Technical data ➔ Internet: npqp

Polypropylene fitting for use in applications with extreme influence of media. For pneumatic applications with a temperature range up to 60 °C and a pressure range up to 10 bar.
Tubing outside diameters of 4, 6, 8, 10 and 12 mm with connecting threads R⅛ ... R½.

NPQR, stainless steel

Technical data ➔ Internet: npqr

Stainless steel push-in fitting. Maximum corrosion resistance CRC 4 and chemical resistance. For pneumatic applications with a temperature range up to 150 °C and a pressure range up to 16 bar.
Tubing outside diameters of 4, 6, 8, 10 and 12 mm with connecting threads M5, M7 and G⅛ ... G½.

Push-in fittings QS

Features

Functional push-in fittings product range

QSK, self-sealing push-in fitting — Technical data ➔ Internet: qsk

Push-in fitting that blocks the air flow after the tubing is disconnected. For pneumatic applications with a temperature range up to 60 °C and a pressure range up to 14 bar. Tubing O.D.∅ of 4, 6, 8, 10 and 12 mm with connecting threads M5, R⅛ … R½ and G⅛ … G½.

QSR, rotary push-in fitting — Technical data ➔ Internet: qsr

Push-in fitting with swivel connection, rotatable by 360°. The ball bearing enables rotating movements in the application up to max. 500 rpm. For pneumatic applications with a temperature range up to 60 °C and a pressure range up to 14 bar. Tubing O.D.∅ of 4, 6, 8, 10 and 12 mm with connecting threads M5, R⅛ … R½ and G⅛ … G½.

Quick connectors product range

NPCK — Technical data ➔ Internet: npck

Stainless steel fitting for use in areas subject to intensive cleaning. Highest level of corrosion resistance (CRC 4). For pneumatic applications with a temperature range up to 120 °C and a pressure range up to 12 bar. Tubing O.D.∅ of 4, 6, 8 and 10 mm with connecting thread M5 and G⅛ … G⅜.

Click fittings product range

NPKA — Technical data ➔ Internet: npka

Plastic fitting for easy installation with one-hand operation. Hydrolysis resistant, FDA compliant and easy to clean. For pneumatic applications with a temperature range up to 60 °C and a pressure range up to 10 bar. Tubing O.D. 6 mm with connecting thread G⅛.

Push-in fittings QS

Key features

FESTO

Simply "plug and work"	Reliably connected	Captive seal	Orientable
		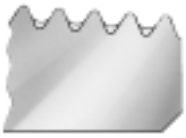	
The stainless steel retaining claw within the fitting holds the tubing securely without damaging its surface. Vibration and pressure surges are safely absorbed.	A nitrile rubber sealing ring guarantees a perfect seal between standard OD tubing and the body of the fitting. Standard tubing is suitable for use with compressed air and vacuum.	All brass parts of Festo's push-in fittings are nickel plated and are thus highly resistant to corrosion. The tapered ISO R threads have a self-sealing PTFE coating, which allows the fitting to be re-used up to five times without the need for additional sealing components.	The fitting can be aligned after assembly.

Tube assembly/disassembly

Mounting

The prerequisite for ensuring that the inside seal is securely held and protected against damage is that the tube be cut to straight lengths and deburred.

1) Insert tubing until the end stop. It is important to ensure that the tubing is inserted into the inside seal. Depending on the tolerance position of the tubing and the seal, the contact of the tubing with the seal may be wrongly interpreted as the end stop.
2) Check that the tubing connector is securely held by pulling gently on the tube.

Dismantling

1) The tubing can be detached easily by pressing down and holding the releasing ring. Remove the tubing carefully from the threaded connector.
2) Before re-using the tubing, remove the damaged part by cutting it off.

Push-in fittings QS

Key features

Which fitting fit which thread?

Metric parallel thread

- Cylindrical metric thread is comparable with G thread
- Sealing is guaranteed via a sealing ring
- Sealing on front face

G parallel thread to ISO 228-1

- Shorter thread
- Constant installation depth
- Replaceable sealing ring
- Sealing on front face
- Can be re-used a number of times thanks to replaceable sealing ring

R tapered thread to EN 10226-1 and ISO 7/1

- Self-sealing thread
- Sealing via coated threads
- No additional sealing surface required
- Smaller installation dimensions since there is no need for a rebate for the sealing surface
- Can be re-used up to five times

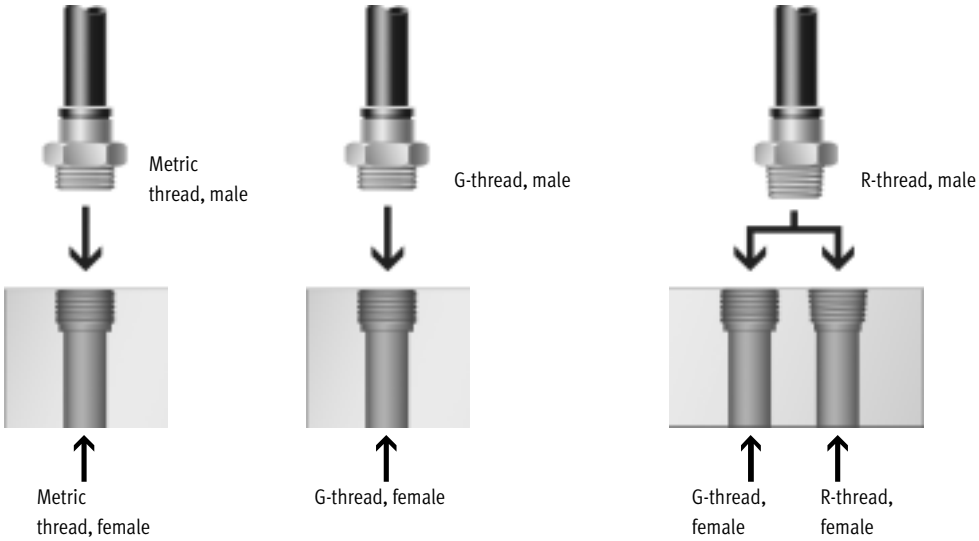

Materials

Sectional view

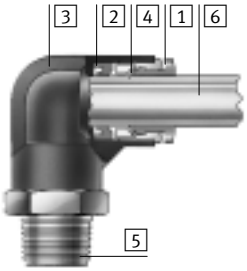

Size	QSM, mini series QS, standard series
1 Release ring	POM (colour: blue)
2 Seal	NBR
3 Body	Nickel-plated brass, PBT QSM-M3-3/4: Nickel-plated steel
4 Tube retaining claw	High-alloy stainless steel
5 Threaded plug	Nickel-plated brass M3: Nickel-plated steel
6 Plastic tubing with standard O.D.	PAN PEN PUN PUN-H
Note on materials	RoHS-compliant

Size	QS-V0, weld spatter resistant
1 Release ring	PBT-reinforced (colour: black)
2 Seal	NBR
3 Body	PBT-reinforced
4 Tube retaining claw	High-alloy stainless steel Brass
5 Threaded plug	Nickel-plated brass
6 Plastic tubing with standard O.D.	PAN-V0
Note on materials	RoHS-compliant

Reference values for the tubing insertion depth[1)]

Tubing O.D. [mm]	2	3	4	6	8	10	12	14	16	22
QSM, mini series	8.4	9.5	11.5	12	–	–	–	–	–	–
QS, standard series	–	–	15 (QSW: 12)	17 (QSW: 12)	18	20.5	23.5	–	24.5	28
QS-V0, weld spatter resistant	–	–	20	22	23.5	26	28.5	–	–	–

1) The indicated tubing insertion depths are reference values and may vary slightly depending on the type.

Recommended tightening torque

When using push-in fittings with internal hex, ensure that the Allen key is not inserted too far into the fitting to prevent the risk of damage to components behind the fitting.

Note

All R-threads are coated with a sealing material. This coating replaces the conventional sealing ring. Simply screw in the R-thread by hand and tighten it with 1 or 2 turns of a spanner. The fitting can be reinstalled up to five times.
When screwing in R-threads several times, you must make sure that the abraded particles from the sealing material coating cannot enter the compressed air system.

Connecting thread	Nominal tightening torque [Nm]
M thread	
M3	0.48 ±55%
M5	1.33 ±20%
M7	3.35 ±20%
G thread	
G⅛	7 ±20%
G¼	9 ±20%
G⅜	15.5 ±20%
G½	26 ±20%
G¾	20 ±20%

General technical data	
Design	Push-pull principle
Mounting position	Any
Type of seal on threaded plug	Sealing ring (metric thread, G thread)
	Coating (R thread)

Operating and environmental conditions			
Size	QSM, mini series	QS, standard series	
		Except QS-G¾-22	QS-G¾-22
Operating pressure [bar] complete temperature range	−0.95 … +6		−0.95 … +14
Temperature-dependent operating pressure [bar]	−0.95 … +14 ➔ diagram		
Operating medium	Compressed air in accordance with ISO 8573-1:2010 [7:−:−]		
	–	Water as per manufacturer's declaration[1)2)]	
Note on operating/pilot medium	Operation with lubricated medium possible		
Ambient temperature [°C]	−10 … +80		−20 … +80
Corrosion resistance class CRC[3)]	1		
Maritime classification	See certificate[1)]		–

Size	QS-V0, weld spatter resistant
Operating pressure [bar] complete temperature range	−0.95 … +10
Operating medium	Compressed air in accordance with ISO 8573-1:2010 [7:−:−]
	Water as per manufacturer's declaration[1)]
Note on operating/pilot medium	Operation with lubricated medium possible
Ambient temperature [°C]	0 … +60
Corrosion resistance class CRC[3)]	2
Material fire test	UL94 V-0 (body, release ring)
Maritime classification	See certificate[1)]

1) Additional information www.festo.com/sp ➔ Certificates.
2) The supplied sealing ring must be replaced with an OL sealing ring on push-in fittings with a G-thread ➔ Internet: ol
3) Corrosion resistance class CRC 1 to Festo standard FN 940070
Low corrosion stress. For dry indoor applications or transport and storage protection. Also applies to parts behind covers, in the non-visible interior area, and parts which are covered in the application (e.g. drive trunnions).
Corrosion resistance class CRC 2 to Festo standard FN 940070
Moderate corrosion stress. Indoor applications in which condensation may occur. External visible parts with primarily decorative requirements for the surface and which are in direct contact with the ambient atmosphere typical for industrial applications.

Operating pressure p as a function of temperature t

QSM, mini series
QS (except QS-G¾-22), standard series

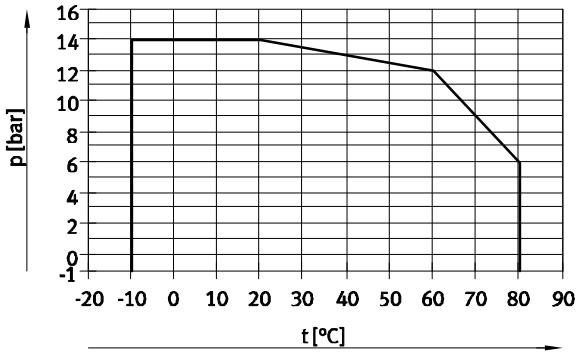

Push-in fittings QS

Technical data

Possible push-in fitting/tubing combinations											
Type	Thread	Tubing O.D. [mm]									
		2	3	4	6	8	10	12	14	16	22
QSM, mini series	M3	+	++	+	–	–	–	–	–	–	–
	M5	+	+	++	+	–	–	–	–	–	–
	M6	–	–	–	+	–	–	–	–	–	–
	M7	–	–	+	++	–	–	–	–	–	–
	M8	–	–	–	++	–	–	–	–	–	–
	R⅛	–	–	+	++	–	–	–	–	–	–
	G⅛	–	–	+	++	–	–	–	–	–	–
QS, standard series	M5	–	–	++	+	–	–	–	–	–	–
	R⅛	–	–	+	++	+	+	–	–	–	–
	R¼	–	–	+	+	++	+	+	–	–	–
	R⅜	–	–	–	+	+	++	+	–	+	–
	R½	–	–	–	–	–	+	++	–	+	–
	G⅛	–	–	+	++	+	+	–	–	–	–
	G¼	–	–	+	+	++	+	+	–	–	–
	G⅜	–	–	–	+	+	++	+	–	+	–
	G½	–	–	–	–	–	–	++	–	+	–
	G¾	–	–	–	–	–	–	–	–	–	++
QS-V0, weld spatter resist-ant	R⅛	–	–	+	++	+	–	–	–	–	–
	R¼	–	–	–	+	++	+	+	–	–	–
	R⅜	–	–	–	–	+	++	+	–	–	–
	R½	–	–	–	–	–	+	++	–	–	–
	G⅛	–	–	–	++	+	–	–	–	–	–
	G¼	–	–	–	+	++	+	+	–	–	–
	G⅜	–	–	–	–	+	++	+	–	–	–
	G½	–	–	–	–	–	+	++	–	–	–

\+ Possible thread/tubing O.D. combinations

++ Optimum thread/tubing O.D. combinations (with regard to flow)

Push-in fittings QSM, mini series

Product range overview

Design	Version	Type	Connection D1					Connection D2	➔ Page/ Internet
			M thread	R thread	G thread	Tubing O.D.	Push-in sleeve ∅	Tubing O.D.	
Straight design	**Push-in fitting – Male thread with external hex**								
		QSM	M3	–	–	–	–	2, 3, 4	22
			M5					2, 3, 4, 6	
			M6					6	
		QSM	–	R⅛	G⅛	–	–	4, 6	
	Push-in fitting – Male thread with internal hex								
		QSM-...-I	M3	–	–	–	–	2, 3, 4	23
			M5					3, 4, 6	
			M7	R⅛	G⅛			4, 6	
	Push-in fitting – Male thread with internal hex, round release ring								
		QSM-...-I-R	M3	–	–	–	–	3, 4	24
			M5					3, 4, 6	
			M7					6	
	Push-in fitting – Female thread with external hex								
		QSMF	M3	–	–	–	–	3, 4	25
			M5					3, 4	
	Push-in fitting – Male thread with internal hex								
		QSMP	M6x0.75	–	–	–	–	4	25
			M8x0.75					6	
			M8x1.25					6	
	Push-in connector								
		QSM	–	–	–	3	–	3	26
						4		4	
						6		6	
		QSM Reducing	–	–	–	3	–	2	26
						4		3	
						6		4	
	Push-in bulkhead connector								
		QSMS	–	–	–	3	–	–	26
						4			
						6			
	Push-in cap								
		QSMC	–	–	–	3	–	–	27
	Push-in connector with sleeve								
		QSM-...H	–	–	–	–	3	2	27
							4	3	
							6	4	
	Blanking plug								
		QSMC-...H	–	–	–	–	2	–	27
							3		

Push-in fittings QSM, mini series

Product range overview

Design	Version	Type	Connection D1					Connection D2	➔ Page/ Internet
			M thread	R thread	G thread	Tubing O.D.	Push-in sleeve ∅	Tubing O.D.	
L-shape	Push-in L-fitting, orientable – Male thread with external hex								
		QSML	M3	–	–	–	–	2, 3, 4	28
			M5					2, 3, 4, 6	
			M7	R⅛	G⅛			4, 6	
	Push-in long L-fitting, orientable – Male thread with external hex								
		QSMLL	M3	–	–	–	–	2, 3, 4	29
			M5					2, 3, 4, 6	
			M7	R⅛	G⅛			4, 6	
	Push-in L-fitting, orientable – Male thread with internal hex								
		QSMLV-...-I	M5	–	–	–	–	3, 4	30
			M7					4, 6	
	Push-in long L-fitting, orientable – Male thread with internal hex								
		QSMLLV-...-I	M5	–	–	–	–	3, 4	30
			M7					4, 6	
	Push-in L-connector								
		QSML	–	–	–	3	–	–	31
						4			
						6			
	Push-in L-connector with sleeve								
		QSML-...H	–	–	–	–	3	3	31
							4	4	
							6	6	
		QSML-...H Reducing	–	–	–	–	4	3	31
							6	4	
T-shape	Push-in T-fitting, orientable – Male thread with external hex								
		QSMT	M3	–	–	–	–	3, 4	32
			M5					3, 4, 6	
			–	R⅛	G⅛			4, 6	
		QSMTL	M3	–	–	–	–	3, 4	33
			M5					3, 4, 6	
			–	R⅛	G⅛			4, 6	
	Push-in T-connector								
		QSMT	–	–	–	2	–	2	34
						3		3	
						4		4	
						6		6	
		QSMT Reducing	–	–	–	4	–	3	34
						6		4	
X-shape	Push-in X-connector								
		QSMX	–	–	–	3	–	–	35
						4			
						6			

Push-in fittings QSM, mini series

Product range overview

Design	Version	Type	Connection D1					Connection D2	➔ Page/ Internet
			M thread	R thread	G thread	Tubing O.D.	Push-in sleeve ∅	Tubing O.D.	
Y-shape	**Push-in Y-connector**								
		QSMY	–	–	–	2	–	2	35
						3		3	
						4		4	
						6		6	
		QSMY Reducing	–	–	–	4	–	3	35
						6		4	

Push-in fittings QS, standard series

Product range overview

Design	Version	Type	Connection D1					Connection D2		➔ Page/ Internet
			M thread	R thread	G thread	Tubing O.D.	Push-in sleeve ∅	Tubing O.D.	Push-in sleeve ∅	
Straight design	**Push-in fitting – Male thread with external hex**									
		QS	–	R⅛	G⅛	–	–	4, 6, 8, 10[1]	–	36
				R¼	G¼			4[1], 6, 8, 10, 12		
				R⅜	G⅜			6[1], 8, 10, 12, 16		
				R½	G½			10[1], 12, 16		
				–	G¾			22		38
	Push-in fitting – Male thread with internal hex									
		QS-...-I	–	R⅛	G⅛	–	–	4, 6, 8, 10	–	39
				R¼	G¼			6, 8, 10, 12[1]		
				R⅜	G⅜			8, 10, 12		
				R½	G½			10[1], 12		
	Push-in fitting – Female thread with external hex									
		QSF	–	–	G⅛	–	–	4, 6, 8	–	41
					G¼			4, 6, 8, 10, 12		
					G⅜			6, 8, 10, 12		
					G½			12, 16		
	Push-in connector									
		QS	–	–	–	4	–	4	–	42
						6		6		
						8		8		
						10		10		
						12		12		
						16		16		
		QS Reducing	–	–		6	–	4	–	42
						8		4, 6		
						10		6, 8		
						12		8, 10		
	Push-in bulkhead connector									
		QSS	–	–	–	4	–	–	–	43
						6				
						8				
						10				
						12				
	Push-in bulkhead connector with fixed collar									
		QSS-...-F	–	–	–	4	–	–	–	43
						6				
						8				
						10				
						12				
	Push-in bulkhead fitting with female thread									
		QSSF	–	–	G⅛	–	–	4, 6, 8	–	44
					G¼			4, 6, 8, 10		
					G⅜			6, 8, 10, 12		
					G½			12, 16		

1) Only in conjunction with R thread

Push-in fittings QS, standard series

Product range overview

Design	Version	Type	Connection D1					Connection D2		➔ Page/ Internet
			M thread	R thread	G thread	Tubing O.D.	Push-in sleeve ∅	Tubing O.D.	Push-in sleeve ∅	
Straight design	**Push-in cap**									
		QSC	–	–	–	4	–	–	–	45
						6				
						8				
						10				
						12				
	Push-in connector with sleeve									
		QS-...H	–	–	–	–	6	4	–	45
							8	4, 6		
							10	6, 8		
							12	6, 8, 10		
	Push-in sleeve									
		QSH	–	–	–	–	4	–	–	47
							6			
							8			
							10			
							12			
							16			
		QSH Reducing	–	–	–	–	6	–	4	47
							8		4, 6	
							10		6, 8	
							12		8, 10	
							16		12	
	Blanking plug									
		QSC-...H	–	–	–	–	4	–	–	48
							6			
							8			
							10			
							12			
							16			
	Multiple distributor, orientable, 4 outlets									
		QSQ	–	R⅛	G⅛	–	–	4, 6	–	qsq
				R¼	G¼			4, 6		
		QSQ Reducing	–	–	–	6	–	4	–	qsq
						8		6		

Push-in fittings QS, standard series

Product range overview

Design	Version	Type	Connection D1					Connection D2		➔ Page/ Internet
			M thread	R thread	G thread	Tubing O.D.	Push-in sleeve ∅	Tubing O.D.	Push-in sleeve ∅	
L-shape	**Push-in L-fitting, orientable – Male thread with external hex**									
		QSL	–	R⅛	G⅛	–	–	4, 6, 8, 10[1]	–	49
				R¼	G¼			4[1], 6, 8, 10, 12		
				R⅜	G⅜			6[1], 8, 10, 12, 16		
				R½	G½			10[1], 12, 16		
	Push-in long L-fitting, orientable – Male thread with external hex									
		QSLL	–	R⅛	G⅛	–	–	4, 6, 8	–	51
				R¼	G¼			4[1], 6, 8, 10, 12[2]		
				R⅜	G⅜			6[1], 8, 10, 12		
				R½	G½			10[1], 12, 16[2]		
	Push-in L-fitting – Female thread with external hex									
		QSLF	–	–	G⅛	–	–	4, 6, 8	–	53
					G¼			6, 8, 10		
					G⅜			8, 10		
	Push-in L-fitting, orientable – Male thread with internal hex									
		QSLV-...-I	–	R⅛	G⅛	–	–	6, 8	–	54
				R¼	G¼			6, 8, 10		
				R⅜	G⅜			8, 10, 12		
				R½	G½			12		
	Push-in L-fitting, orientable – Male thread with external hex									
		QSLV	M5	–	–	–	–	6	–	55
			–	R⅛	G⅛	–	–	4, 6, 8	–	
				R¼	G¼			6, 8, 10		
				R⅜	G⅜			8, 10, 12		
				R½	G½			12, 16		
	Push-in L-connector									
		QSL	–	–	–	4	–	–	–	57
						6				
						8				
						10				
						12				
						16				

1) Only in conjunction with R thread
2) Only in conjunction with G thread

Push-in fittings QS, standard series

Product range overview

Design	Version	Type	Connection D1					Connection D2		➔ Page/ Internet
			M thread	R thread	G thread	Tubing O.D.	Push-in sleeve ∅	Tubing O.D.	Push-in sleeve ∅	
L-shape	Push-in L-connector with sleeve									
		QSL-...H	–	–	–	–	4	4	–	58
							6	6		
							8	8		
							10	10		
							12	12		
		QSL-...H Reducing	–	–	–	–	6	4	–	58
							8	6		
							10	8		
							12	10		
		QSL-...HL Long push-in sleeve	–	–	–	–	4	4	–	58
							6	6		
							8	8		
							10	10		
							12	12		
	Multiple distributor, orientable, 2 outlets									
		QSLV2	–	R⅛	G⅛	–	–	4, 6, 8	–	qslv
				R¼	G¼			6, 8, 10		
				R⅜	G⅜			8, 10, 12		
				R½	G½			12		
	Multiple distributor, orientable, 3 outlets									
		QSLV3	–	R⅛	G⅛	–	–	4, 6, 8	–	qslv
				R¼	G¼			6, 8, 10		
				R⅜	G⅜			8, 10, 12		
				R½	G½			12		
	Multiple distributor, orientable, 4 outlets									
		QSLV4	–	R⅛	G⅛	–	–	4, 6, 8	–	qslv
				R¼	G¼			6, 8, 10		
				R⅜	G⅜			8, 10, 12		
				R½	G½			12		
	Multiple distributor, orientable, 6 outlets									
		QSLV6	–	R⅛	G⅛	–	–	4, 6, 8	–	qslv
				R¼	G¼			6, 8, 10		
				R⅜	G⅜			8, 10, 12		
				R½	G½			12		
	Multiple distributor, orientable, 3 outlets – Male and female thread with external hex									
		QSYTF	–	R⅛	G⅛	–	–	6	–	qsytf
				R¼	G¼			8		
				R⅜	G⅜			10		
				R½	G½			12		

Push-in fittings QS, standard series

Product range overview

Design	Version	Type	Connection D1				Connection D2		Connection D3	➔ Page/ Internet
			R thread	G thread	Tubing O.D.	Push-in sleeve ∅	Tubing O.D.	Push-in sleeve ∅	Tubing O.D.	
L-shape	**Multiple distributor, orientable, 4 outlets**									
	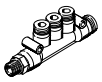	**QST3**	R⅛	G⅛	–	–	6	–	4	qst
			R¼	G¼			8		6	
			R⅜	G⅜			10		8	
		QST3 Reducing	–	–	6	–	6	–	4	qst
					8		8		6	
					10		10		8	

Design	Version	Type	Connection D1					Connection D2		➔ Page/ Internet
			M thread	R thread	G thread	Tubing O.D.	Push-in sleeve ∅	Tubing O.D.	Push-in sleeve ∅	
T-shape	**Push-in T-fitting, orientable – Male thread with external hex**									
		QST	–	R⅛	G⅛	–	–	4, 6, 8, 10[1)]	–	59
				R¼	G¼			4[1)], 6, 8, 10, 12		
				R⅜	G⅜			6[1)], 8, 10, 12, 16		
				R½	G½			10,[1)] 12, 16		
	Push-in T-connector									
		QST	–	–	–	4	–	4	–	61
						6		6		
						8		8		
						10		10		
						12		12		
						16		16		
		QST Reducing	–	–	–	6	–	4	–	61
						8		4, 6		
						10		6, 8		
						12		8, 10		
						16		12		
	Push-in T-fitting, orientable – Male and female thread with external hex									
		QSTF	–	R⅛	G⅛	–	–	4, 6, 8	–	62
				R¼	G¼			6, 8, 10		
				R⅜	G⅜			8, 10, 12		
				R½	G½			12		
	Push-in T-fitting, orientable – Male thread with external hex									
		QSTL	–	R⅛	G⅛	–	–	4, 6, 8	–	63
				R¼	G¼			6, 8, 10		
				R⅜	G⅜			8, 10, 12		
				R½	G½			12, 16		

1) Only in conjunction with R thread

Push-in fittings QS, standard series

Product range overview

Design	Version	Type	Connection D1					Connection D2		➔ Page/ Internet
			M thread	R thread	G thread	Tubing O.D.	Push-in sleeve ∅	Tubing O.D.	Push-in sleeve ∅	
Angled design	Push-in fitting, orientable – Male thread with external hex									
		QSW	–	R⅛	–	–	–	4, 6, 8	–	65
				R¼				6, 8, 10		
				R⅜				10, 12		
				R½				12, 16		
	Push-in connector with sleeve									
		QSW-HL	–	–	–	–	4	4	–	66
							6	6		
							8	8		
							10	10		
							12	12		
X-shape	Push-in X-connector									
		QSX	–	–	–	8	–	–	–	66
						10				
						12				
Y-shape	Push-in Y-fitting, orientable – Male thread with external hex									
		QSY	M5	–	–	–	–	4, 6	–	67
			–	R⅛	G⅛			4, 6, 8		
				R¼	G¼			4[1], 6, 8,10		
				R⅜	G⅜			8, 10, 12		
				R½	G½			10[1], 12		
	Push-in Y-connector									
		QSY	–	–	–	4	–	4	–	69
						6		6		
						8		8		
						10		10		
						12		12		
						16		16		
		QSY Reducing	–	–	–	6	–	4	–	69
						8		4, 6		
						10		6, 8		
						12		8, 10		
						16		12		
	Push-in Y-connector with sleeve									
		QSY-...H(-B)	–	–	–	–	4	4	–	70
							6	6		
							8	8		
							10	10		
							12	12		
		QSY-...H(-B) Reducing	–	–	–	–	6	4	–	70
							8	6		
							10	8		
							12	10		

Push-in fittings QS, standard series

Product range overview

Design	Version	Type	Connection D1					Connection D2		➔ Page/ Internet
			M thread	R thread	G thread	Tubing O.D.	Push-in sleeve ∅	Tubing O.D.	Push-in sleeve ∅	
Y-shape	**Push-in Y-fitting, orientable – Male thread with external hex**									
		QSYL	–	R⅛	G⅛	–	–	4, 6, 8	–	71
				R¼	G¼			6, 8, 10		
				R⅜	G⅜			8, 10, 12		
				R½	G½			12		
	Push-in Y-fitting, orientable – Male thread with external hex									
		QSYLV	–	R⅛	G⅛	–	–	6	–	72
				R¼	G¼			8		
				R⅜	G⅜			10		
				R½	G½			12		
Release tool	**Quick-release tool for QS push-in fittings and connectors**									
		QSO	–							79

1) Only in conjunction with R thread

Push-in fittings QS-V0, weld spatter resistant

Product range overview

Design	Version	Type	Connection D1					Connection D2		➔ Page/ Internet
			M thread	R thread	G thread	Tubing O.D.	Push-in sleeve ∅	Tubing O.D.	Push-in sleeve ∅	
To UL94 V-0 – For plastic tubing PAN/PUN-V0										
Straight design	**Push-in fitting – Male thread with external hex**									
		QS-V0	–	R⅛	G⅛	–	–	4[1], 6, 8	–	73
				R¼	G¼			6, 8, 10, 12		
				R⅜	G⅜			8, 10, 12		
				R½	G½			10, 12		
	Push-in connector									
		QS-V0	–	–	–	4	–	–	–	74
						6				
						8				
						10				
						12				
L-shape	**Push-in L-fitting – Male thread with external hex**									
		QSL-V0	–	R⅛	G⅛	–	–	4[1], 6, 8	–	75
				R¼	G¼			6, 8, 10, 12		
				R⅜	G⅜			8, 10, 12		
				R½	G½			10, 12		
	Push-in L-connector									
		QSL-V0	–	–	–	4	–	–	–	76
						6				
						8				
						10				
						12				
T-shape	**Push-in T-fitting – Male thread with external hex**									
		QST-V0	–	R⅛	G⅛	–	–	4[1], 6, 8	–	77
				R¼	G¼			6, 8, 10, 12		
				R⅜	G⅜			8, 10, 12		
				R½	G½			10, 12		
	Push-in T-connector									
		QST-V0	–	–	–	4	–	–	–	78
						6				
						8				
						10				
						12				

1) Only in conjunction with R thread

Push-in fittings QSM, mini series

Technical data

Push-in fitting QSM

Male thread with external hex

M thread

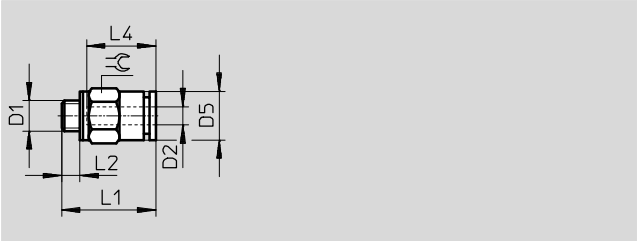

R thread

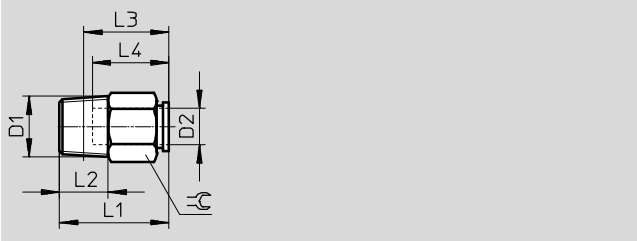

G thread

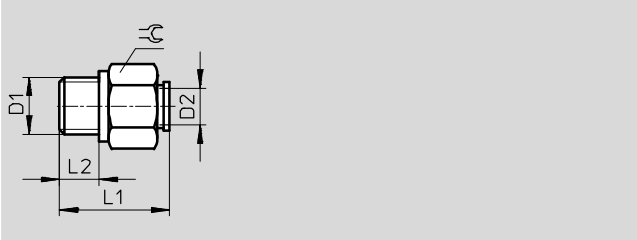

Dimensions and ordering data												
Connection D1	Nominal size [mm]	Tubing O.D. D2	D5 ∅	L1	L2	L3	L4	⬡	Weight/ piece [g]	Part No.	Type	PU[1]
Metric thread with sealing ring												
M3	0.9	2	4.8	12.1	2.5	–	8.4	5	1	**133027**	**QSM-M3-2**	**10**
		3	7	13.3	2.5	–	9.6	5.5	1.1	**153301**	**QSM-M3-3**	**10**
										130775	**QSM-M3-3-100**	**100**
	1.1	4	9.8	15.7	2.5	–	11.5	8	2.4	★ **153303**	**QSM-M3-4**	**10**
										130776	**QSM-M3-4-100**	**100**
M5	1.1	2	4.8	11.8	3	–	8.4	7	2.2	**133028**	**QSM-M5-2**	**10**
	2	3	9.8	16.2	3	–	11.5	8	3.4	**153302**	**QSM-M5-3**	**10**
										130777	**QSM-M5-3-100**	**100**
	2.2	4	9.8	16.2	3	–	11.5	8	3.2	★ **153304**	**QSM-M5-4**	**10**
										130778	**QSM-M5-4-100**	**100**
	2.1	6	11.8	17.3	3	–	12	10	4.5	★ **153306**	**QSM-M5-6**	**10**
										130779	**QSM-M5-6-100**	**100**
M6	2.8	6	11.8	18	3.9	–	11.7	10	4.8	★ **132600**	**QSM-M6-6**	**10**
R thread												
R⅛	2.9	4	–	16	8	12	11.5	10	6	★ **153305**	**QSM-⅛-4**	**10**
										130755	**QSM-⅛-4-100**	**100**
	4.5	6	–	18	8	14	12	10	6	★ **153307**	**QSM-⅛-6**	**10**
										130756	**QSM-⅛-6-100**	**100**
G thread with sealing ring												
G⅛	2.9	4	–	16.4	5.1	–	–	13	9.4	★ **186264**	**QSM-G⅛-4**	**10**
	2.8	6	–	18.4	5.1	–	–	13	11	★ **186265**	**QSM-G⅛-6**	**10**

1) Packaging unit quantity

Festo core product range	★ Generally ready for shipping ex works in 24 hours ☆ Generally ready for shipping ex works in 5 days

Push-in fittings QSM, mini series

Technical data

Push-in fitting QSM-...-I

Male thread with internal hex

M thread

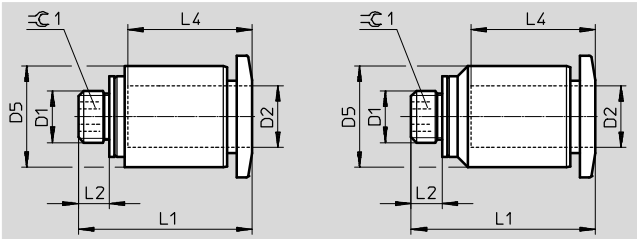

QSM-M3-2-I, QSM-M5-3-I, QSM-M5-4-I, QSM-M7-4-I, QSM-M7-6-I

QSM-M3-3-I, QSM-M3-4-I, QSM-M5-6-I

R thread

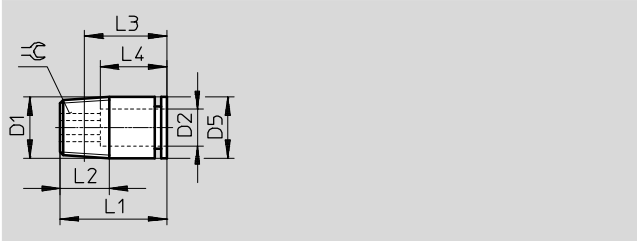

G thread

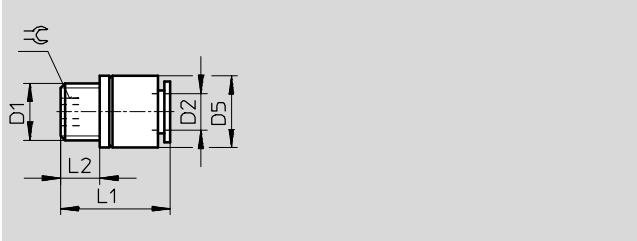

Dimensions and ordering data												
Connection D1	Nominal size [mm]	Tubing O.D. D2	D5 ∅	L1	L2	L3	L4	⇔	Weight/ piece [g]	Part No.	Type	PU[1]
Metric thread with sealing ring												
M3	1.1	2	5	12.1	2.5	–	8.4	1.3	0.8	**133026**	**QSM-M3-2-I**	**10**
	1.6	3	8	15.7	2.5	–	11.5	1.5	2.3	**153312**	**QSM-M3-3-I**	**10**
	1.5	4	8	15.7	2.5	–	11.5	1.5	2.2	★ **153314**	**QSM-M3-4-I**	**10**
M5	1.9	3	8	16.2	3	–	11.5	2	3.2	**153313**	**QSM-M5-3-I**	**10**
	2.5	4	8	16.2	3	–	11.5	2.5	3	★ **153315**	**QSM-M5-4-I**	**10**
	2.6	6	9.8	17.8	3	–	12	2.5	4.4	★ **153317**	**QSM-M5-6-I**	**10**
M7	3.1	4	9.8	18.9	5.5	–	11.5	3	6	★ **153319**	**QSM-M7-4-I**	**10**
										133006	**QSM-M7-4-I-100**	**100**
	4.1	6	9.8	20.9	5.5	–	12	4	6.4	★ **153321**	**QSM-M7-6-I**	**10**
R thread												
R⅛	3.1	4	10	16.4	8	12.4	11.5	3	6.2	★ **153316**	**QSM-⅛-4-I**	**10**
	4.1	6	10	18.2	8	14.2	12.5	4	5.6	★ **153318**	**QSM-⅛-6-I**	**10**
G thread with sealing ring												
G⅛	3.1	4	13	16.4	5.1	–	–	3	8.9	★ **186266**	**QSM-G⅛-4-I**	**10**
	4.1	6	13	18.4	5.1	–	–	4	9.5	★ **186267**	**QSM-G⅛-6-I**	**10**

1) Packaging unit quantity

Festo core product range	★ Generally ready for shipping ex works in 24 hours ☆ Generally ready for shipping ex works in 5 days

Push-in fittings QSM, mini series

Technical data

Push-in fitting QSM-...-I-R
Male thread with internal hex
Round release ring

M thread

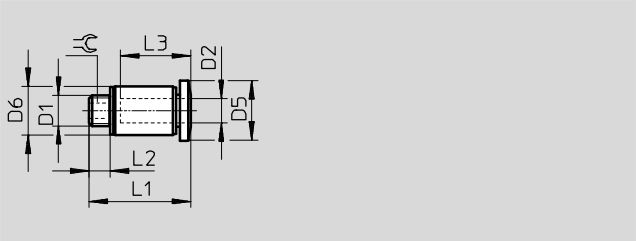

Dimensions and ordering data												
Connection D1	Nominal size [mm]	Tubing O.D. D2	D5 ∅	D6 ∅	L1	L2	L3	⬡	Weight/ piece [g]	Part No.	Type	PU[1]
Metric thread with sealing ring, round release ring												
M3	1.6	3	6.0	5.5	13.3	2.5	9.6	1.5	2.3	**133001**	**QSM-M3-3-I-R**	**10**
										132914	**QSM-M3-3-I-R-100**	**100**
	1.5	4	7.8	8.0	15.7	2.5	11.5	1.5	2.2	**133002**	**QSM-M3-4-I-R**	**10**
										132915	**QSM-M3-4-I-R-100**	**100**
M5	1.9	3	7.8	8.0	16.2	3.0	11.5	2.0	3.2	**133003**	**QSM-M5-3-I-R**	**10**
										132916	**QSM-M5-3-I-R-100**	**100**
	2.5	4	7.8	8.0	16.2	3.0	11.5	2.5	3	**133004**	**QSM-M5-4-I-R**	**10**
										132917	**QSM-M5-4-I-R-100**	**100**
	2.6	6	9.8	9.8	17.8	3.0	12	2.5	4.4	**133005**	**QSM-M5-6-I-R**	**10**
										132918	**QSM-M5-6-I-R-100**	**100**
M7	4.1	6	9.8	9.8	20.9	5.5	12	4.0	6.4	**133007**	**QSM-M7-6-I-R**	**10**
										132919	**QSM-M7-6-I-R-100**	**100**

1) Packaging unit quantity

Push-in fittings QSM, mini series

Technical data

Push-in fitting QSMF

Female thread with external hex

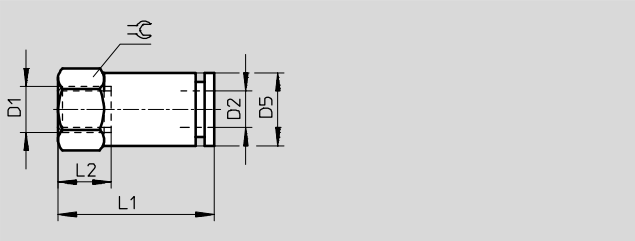

Dimensions and ordering data										
Connection D1	Nominal size [mm]	Tubing O.D. D2	D5 ∅	L1	L2		Weight/ piece [g]	Part No.	Type	PU[1]
Metric thread with sealing ring										
M3	1.3	3	5.5	13.9	4.4	5.5	1.6	**153308**	**QSMF-M3-3**	**10**
	2.1	4	8	16	4.5	8	4.1	**153310**	**QSMF-M3-4**	**10**
M5	1.9	3	8	15.5	4.5	8	4.3	**153309**	**QSMF-M5-3**	**10**
	1.8	4	8	18.2	4.5	8	4.5	**153311**	**QSMF-M5-4**	**10**

1) Packaging unit quantity

Push-in fitting QSMP

Male thread with internal hex

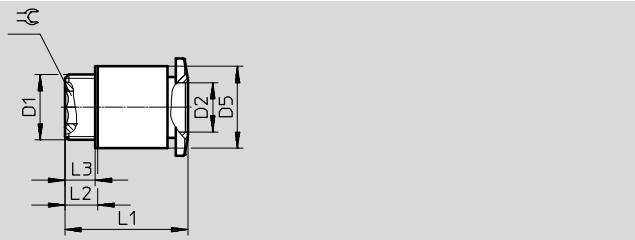

Dimensions and ordering data											
Connection D1	Nominal size [mm]	Tubing O.D. D2	D5 ∅	L1	L2	L3		Weight/ piece [g]	Part No.	Type	PU[1]
Metric thread with sealing ring											
M6x0.75	2.5	4	8	14.6	3.5	3	2.5	2.7	**153320**	**QSMP-M6X0.75-4**	**10**
M8x0.75	4	6	10	15.1	4	3.4	4	3.7	**153322**	**QSMP-M8X0.75-6**	**10**
M8x1.25	4	6	10	19.1	7	6.4	4	4.7	**154434**	**QSMP-M8X1.25-6**	**10**

1) Packaging unit quantity

Push-in fittings QSM, mini series

Technical data

FESTO

Push-in connector QSM

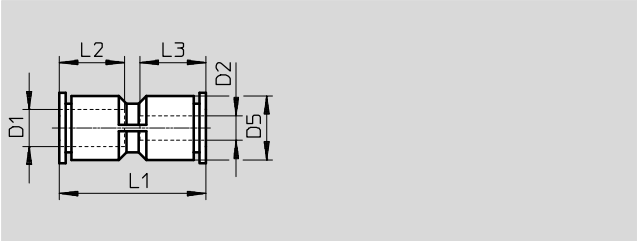

Dimensions and ordering data										
Tubing O.D. D1	Nominal size [mm]	Tubing O.D. D2	D5 ∅	L1	L2	L3	Weight/ piece [g]	Part No.	Type	PU[1]
3	1.9	3	6	20	9.5	9.5	1.5	**153323**	**QSM-3**	**10**
								130757	**QSM-3-100**	**100**
4	2.6	4	8	23.5	11.5	11.5	2	★ **153324**	**QSM-4**	**10**
								130758	**QSM-4-100**	**100**
6	3.7	6	10.5	25	12	12	4	★ **153325**	**QSM-6**	**10**
								130759	**QSM-6-100**	**100**
Reducing										
3	1.1	2	6	19.1	9.3	8.4	1	**133029**	**QSM-3-2**	**10**
4	1.7	3	8	23.9	11.6	11.6	2.1	★ **153326**	**QSM-4-3**	**10**
								130760	**QSM-4-3-100**	**100**
6	2.7	4	10.4	24.9	11.6	11.6	3	★ **153327**	**QSM-6-4**	**10**
								130761	**QSM-6-4-100**	**100**

1) Packaging unit quantity

Push-in bulkhead connector QSMS

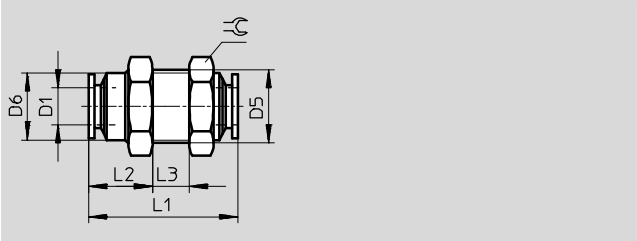

Dimensions and ordering data											
Tubing O.D. D1	Nominal size [mm]	D5	D6 ∅	L1	L2	L3 max.	⬡	Weight/ piece [g]	Part No.	Type	PU[1]
3	1.7	M8x0.75	7	19.5	7	7.5	10	3	**153375**	**QSMS-3**	**10**
4	2.2	M10x1	9	24	9.5	7.5	12	6	★ **153376**	**QSMS-4**	**10**
									130780	**QSMS-4-100**	**100**
6	3.7	M12x1	11	25	11	6	14	9	★ **153377**	**QSMS-6**	**10**
									130781	**QSMS-6-100**	**100**

1) Packaging unit quantity

Festo core product range	★ Generally ready for shipping ex works in 24 hours ☆ Generally ready for shipping ex works in 5 days

Push-in cap QSMC

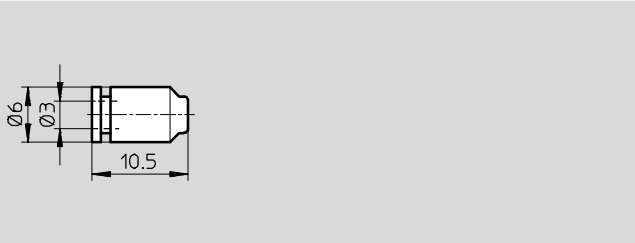

Ordering data				
Tubing O.D.	Weight/piece [g]	Part No.	Type	PU[1]
3	0.5	**153381**	**QSMC-3**	**10**

1) Packaging unit quantity

Push-in connector QSM-...H
with push-in sleeve

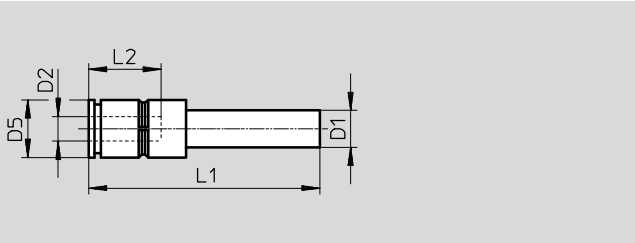

Dimensions and ordering data									
Push-in sleeve ∅ D1	Nominal size [mm]	Tubing O.D. D2	D5 ∅	L1	L2	Weight/ piece [g]	Part No.	Type	PU[1]
3	1.1	2	6	26.3	8.4	0.6	**133035**	**QSM-3H-2**	**10**
4	1.7	3	6	27	9.5	0.8	★ **153328**	**QSM-4H-3**	**10**
							130762	**QSM-4H-3-100**	**100**
6	2.6	4	9	32.6	11.6	2.4	★ **153329**	**QSM-6H-4**	**10**
							130763	**QSM-6H-4-100**	**100**

1) Packaging unit quantity

Blanking plug QSMC-...H

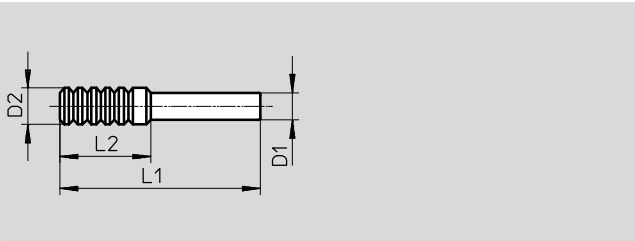

Dimensions and ordering data							
Push-in sleeve ∅ D1	D2 ∅	L1	L2	Weight/ piece [g]	Part No.	Type	PU[1]
2	3	20	10.2	0.1	**133036**	**QSMC-2H**	**10**
3	4	22	10.2	0.2	**153382**	**QSMC-3H**	**10**

1) Packaging unit quantity

Festo core product range	★ Generally ready for shipping ex works in 24 hours ☆ Generally ready for shipping ex works in 5 days

Push-in fittings QSM, mini series

Technical data

Push-in L-fitting QSML
Orientable
Male thread with external hex

M thread

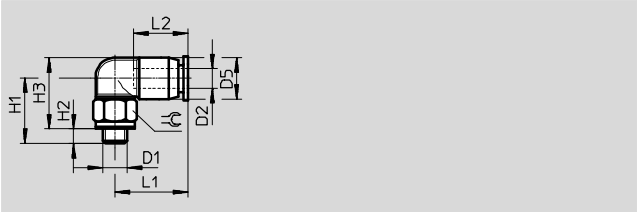

R thread

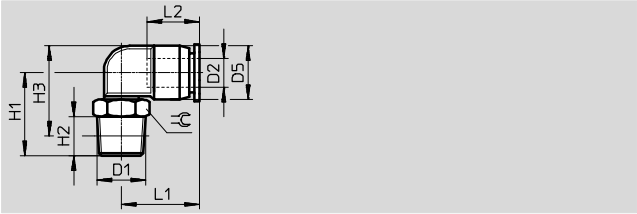

G thread

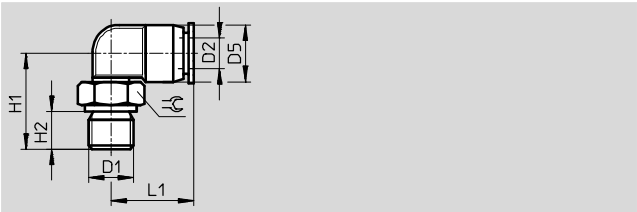

Dimensions and ordering data													
Connection D1	Nominal size [mm]	Tubing O.D. D2	D5 ∅	H1	H2	H3	L1	L2	⬡	Weight/ piece [g]	Part No.	Type	PU[1]
Metric thread with sealing ring													
M3	0.8	2	6	12	2.5	12.5	10.3	8.4	5.5	1.4	133030	QSML-M3-2	10
		3	6	12	2.5	12.5	11	9.5	5.5	1.4	153330	QSML-M3-3	10
											130768	QSML-M3-3-100	100
	1.3	4	8	14	2.5	15.5	15.7	11.6	8	3	★ 153332	QSML-M3-4	10
											130769	QSML-M3-4-100	100
M5	0.9	2	6	13.5	3	13.5	10.3	8.4	8	2.7	133031	QSML-M5-2	10
	1.5	3	6	13.5	3	13.5	11	9.5	8	2.8	153331	QSML-M5-3	10
											130770	QSML-M5-3-100	100
	1.7	4	8	13.5	3	14.5	15.7	11.6	8	3.4	★ 153333	QSML-M5-4	10
											130771	QSML-M5-4-100	100
	2.1	6	10.5	14.5	3	16.8	16.3	11.9	8	4.1	★ 153335	QSML-M5-6	10
											130772	QSML-M5-6-100	100
M7	2	4	8	17	5.5	15.5	15.7	11.6	10	5.6	★ 186352	QSML-M7-4	10
											130773	QSML-M7-4-100	100
	2.4	6	10.5	19	5.5	18.8	16.3	11.9	10	6.2	★ 186353	QSML-M7-6	10
											130774	QSML-M7-6-100	100
R thread													
R⅛	2.5	4	8.5	16	8	16.3	16	11.5	10	6	★ 153334	QSML-⅛-4	10
											130764	QSML-⅛-4-100	100
	3.3	6	11	17	8	18.5	16.5	12	10	7	★ 153336	QSML-⅛-6	10
											130765	QSML-⅛-6-100	100
G thread with sealing ring													
G⅛	2.5	4	8	16.5	5.1	–	15.7	–	13	9	★ 186268	QSML-G⅛-4	10
											132897	QSML-G⅛-4-100	100
	3.3	6	10.5	17.5	5.1	–	16.3	–	13	9.7	★ 186269	QSML-G⅛-6	10

1) Packaging unit quantity

Festo core product range
★ Generally ready for shipping ex works in 24 hours
☆ Generally ready for shipping ex works in 5 days

Push-in long L-fitting QSMLL
Orientable
Male thread with external hex

M thread

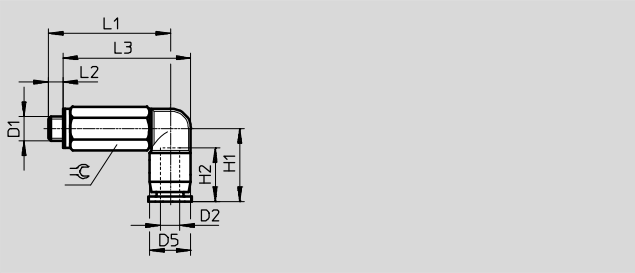

R thread

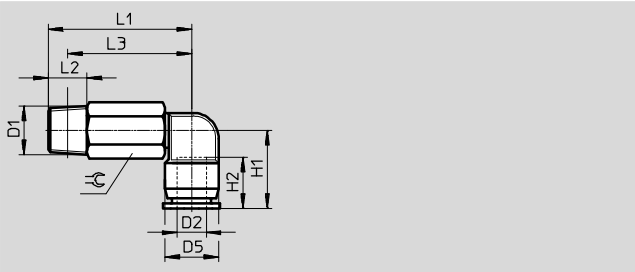

G thread

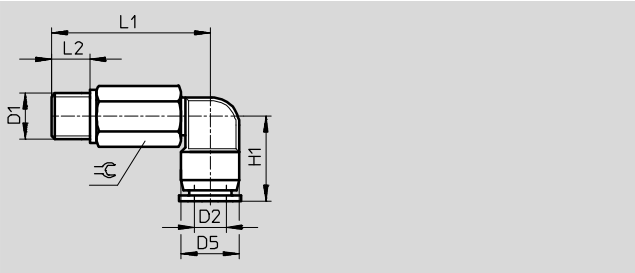

Dimensions and ordering data													
Connection D1	Nominal size [mm]	Tubing O.D. D2	D5 ∅	H1	H2	L1	L2	L3	⌭	Weight/ piece [g]	Part No.	Type	PU[1]
Metric thread with sealing ring													
M3	0.8	2	6	10.3	8.4	19	2.5	19.5	5.5	2.7	**133032**	**QSMLL-M3-2**	**10**
	0.9	3	6	11	9.5	19	2.5	19.5	5.5	2.8	**153337**	**QSMLL-M3-3**	**10**
											133011	**QSMLL-M3-3-100**	**100**
	1.1	4	8	15.7	11.6	23	2.5	24.5	8	6.8	**153338**	**QSMLL-M3-4**	**10**
M5	0.9	2	6	10.3	8.4	25	3	25	8	7,6	**133033**	**QSMLL-M5-2**	**10**
	1.5	3	6	11	9.5	25	3	25	8	7,7	**130838**	**QSMLL-M5-3**	**10**
											133012	**QSMLL-M5-3-100**	**100**
	2	4	8	15.7	11.6	25	3	26	8	8.3	**153339**	**QSMLL-M5-4**	**10**
											133013	**QSMLL-M5-4-100**	**100**
	2	6	10.5	16.3	11.9	26	3	28.3	8	9	**153341**	**QSMLL-M5-6**	**10**
M7	2	4	8	15.7	11.6	29.5	5.5	28	10	14	**186354**	**QSMLL-M7-4**	**10**
											133014	**QSMLL-M7-4-100**	**100**
	2.4	6	10.5	16.3	11.9	31.5	5.5	31.3	10	14	**186355**	**QSMLL-M7-6**	**10**
R thread													
R⅛	2.3	4	8.5	15.5	11.5	28.5	8	22	10	13	**153340**	**QSMLL-⅛-4**	**10**
	3.1	6	11	16.5	12	29.5	8	25.5	10	14	**153342**	**QSMLL-⅛-6**	**10**
G thread with sealing ring													
G⅛	2.3	4	8	15.7	–	29	5.1	–	13	23	**186270**	**QSMLL-G⅛-4**	**10**
	3.1	6	10.5	16.3	–	30	5.1	–	13	23	**186271**	**QSMLL-G⅛-6**	**10**

1) Packaging unit quantity

Push-in L-fitting QSMLV-...-I
Orientable
Male thread with internal hex

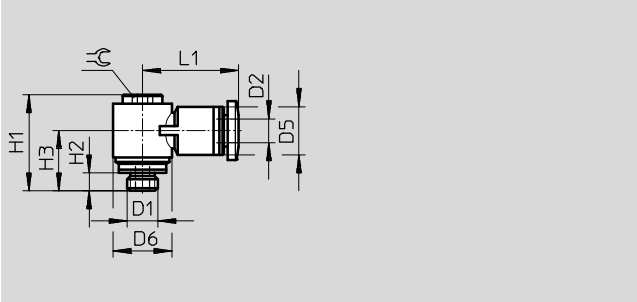

Dimensions and ordering data													
Connection D1	Nominal size [mm]	Tubing O.D. D2	D5 ∅	D6 ∅	H1	H2	H3	L1	⇌	Weight/ piece [g]	Part No.	Type	PU[1]
Metric thread with sealing ring													
M5	1.7	3	8	9.8	16.5	3.5	10.5	16	3	5.1	**130830**	**QSMLV-M5-3-I**	**10**
	1.8	4	8	9.8	16.5	3.5	10.5	16	3	5.0	**130831**	**QSMLV-M5-4-I**	**10**
M7	1.9	4	8	9.8	18.5	5.5	12.5	16	3	5.6	**130832**	**QSMLV-M7-4-I**	**10**
	1.8	6	10.5	9.8	18.5	5.5	12.5	17.8	3	6.2	**130833**	**QSMLV-M7-6-I**	**10**

1) Packaging unit quantity

Push-in long L-fitting QSMLLV-...-I
Orientable
Male thread with internal hex

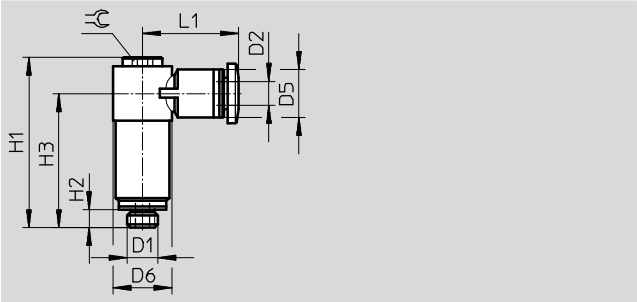

Dimensions and ordering data													
Connection D1	Nominal size [mm]	Tubing O.D. D2	D5 ∅	D6 ∅	H1	H2	H3	L1	⇌	Weight/ piece [g]	Part No.	Type	PU[1]
Metric thread with sealing ring													
M5	1.6	3	8	9.8	28.3	3.5	22.3	16	3	10.9	**130834**	**QSMLLV-M5-3-I**	**10**
	1.8	4	8	9.8	28.3	3.5	22.3	16	3	10.9	**130835**	**QSMLLV-M5-4-I**	**10**
M7	1.9	4	8	9.8	30.3	5.5	24.3	16	3	11.8	**130836**	**QSMLLV-M7-4-I**	**10**
	1.9	6	10.5	9.8	30.3	5.5	24.3	17.8	3	12.4	**130837**	**QSMLLV-M7-6-I**	**10**

1) Packaging unit quantity

Push-in L-connector QSML

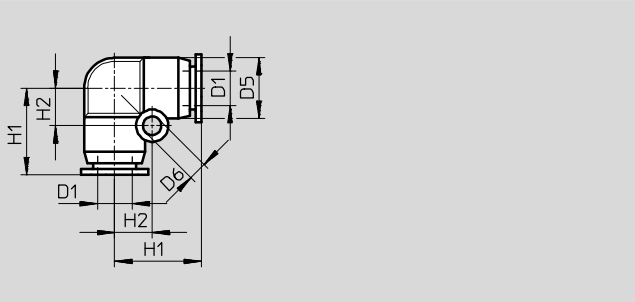

Dimensions and ordering data									
Tubing O.D. D1	Nominal size [mm]	D5 ∅	D6 ∅	H1	H2	Weight/ piece [g]	Part No.	Type	PU[1]
3	1.7	6	3.2	11	4.5	1.5	**153343**	**QSML-3**	**10**
4	2.5	8	3.2	13.5	5.5	2	★ **153344**	**QSML-4**	**10**
							130766	**QSML-4-100**	**100**
6	3.4	10.5	3.2	15.5	6.5	4	★ **153345**	**QSML-6**	**10**
							130767	**QSML-6-100**	**100**

1) Packaging unit quantity

Push-in L-connector QSML-...H
with push-in sleeve

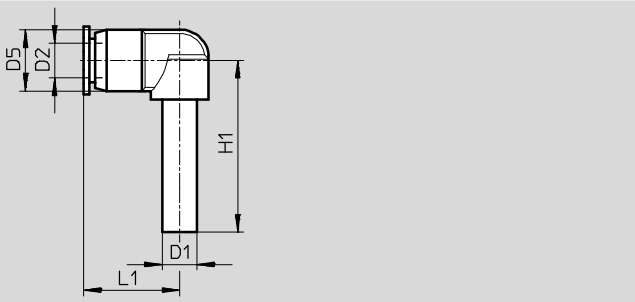

Dimensions and ordering data									
Push-in sleeve ∅ D1	Nominal size [mm]	Tubing O.D. D2	D5 ∅	H1	L1	Weight/ piece [g]	Part No.	Type	PU[1]
3	1.2	3	9	24	14.7	1.7	**153346**	**QSML-3H**	**10**
4	1.9	4	9	25	14.7	1.7	★ **153347**	**QSML-4H**	**10**
6	3.2	6	10.5	26.5	17.3	2.4	★ **153348**	**QSML-6H**	**10**
Reducing									
4	1.7	3	9	25	14.7	1.7	★ **153349**	**QSML-4H-3**	**10**
6	1.9	4	9	26	14.7	1.9	★ **153350**	**QSML-6H-4**	**10**

1) Packaging unit quantity

Festo core product range	★ Generally ready for shipping ex works in 24 hours ☆ Generally ready for shipping ex works in 5 days

Push-in fittings QSM, mini series

Technical data

Push-in T-fitting QSMT
Orientable
Male thread with external hex

M thread

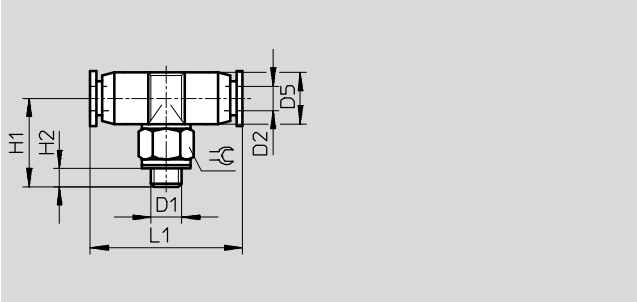

R thread

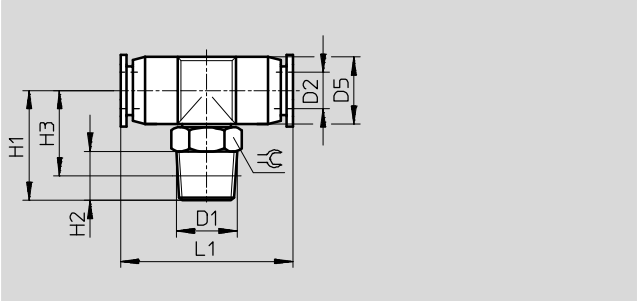

G thread

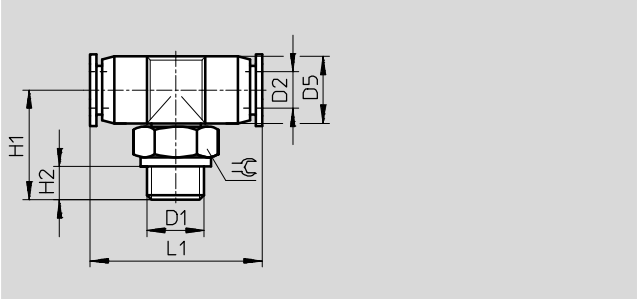

Dimensions and ordering data												
Connection D1	Nominal size [mm]	Tubing O.D. D2	D5 ∅	H1	H2	H3	L1	⬡	Weight/ piece [g]	Part No.	Type	PU[1]
Metric thread with sealing ring												
M3	0.9	3	6	12.8	3.3	–	22	5.5	2	**153351**	**QSMT-M3-3**	**10**
	1.3	4	8	15.8	3.3	–	26.2	8	4	**153353**	**QSMT-M3-4**	**10**
M5	1.6	3	6	14	3.5	–	22	8	3.3	**153352**	**QSMT-M5-3**	**10**
	2.2	4	8	15	3.5	–	26.2	8	4.4	**153354**	**QSMT-M5-4**	**10**
										130784	**QSMT-M5-4-100**	**100**
	2.1	6	10.5	16	3.5	–	28.4	8	5.6	**153356**	**QSMT-M5-6**	**10**
										130785	**QSMT-M5-6-100**	**100**
R thread												
R⅛	2.4	4	8.5	17	8	13	27	10	7	**153355**	**QSMT-⅛-4**	**10**
	3.3	6	11	18	8	14	30	10	8	**153357**	**QSMT-⅛-6**	**10**
G thread with sealing ring												
G⅛	2.4	4	8	17.5	5.1	–	26.2	13	10	**186272**	**QSMT-G⅛-4**	**10**
	3.3	6	10.5	18.5	5.1	–	28.4	13	12	**186273**	**QSMT-G⅛-6**	**10**

1) Packaging unit quantity

Push-in T-fitting QSMTL
Orientable
Male thread with external hex

M thread

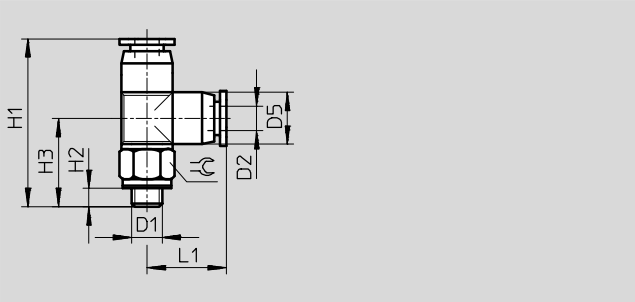

R thread

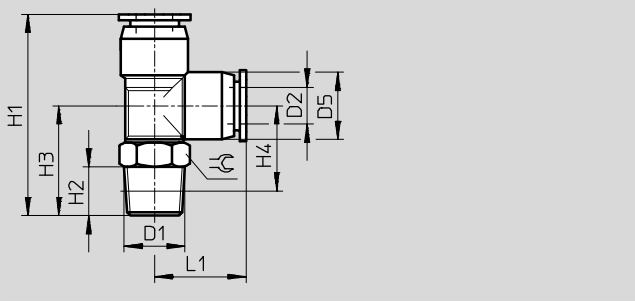

G thread

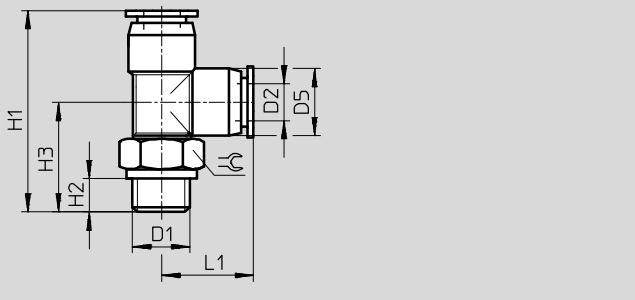

Dimensions and ordering data													
Connection D1	Nominal size [mm]	Tubing O.D. D2	D5 ∅	H1	H2	H3	H4	L1	⬡	Weight/ piece [g]	Part No.	Type	PU[1]
Metric thread with sealing ring													
M3	0.9	3	6	23.8	3.3	12.8	–	11	5.5	2	**153358**	**QSMTL-M3-3**	**10**
	1.1	4	8	29.5	3.3	15.8	–	13.7	8	4	**153360**	**QSMTL-M3-4**	**10**
M5	1.7	3	6	25	3.5	14	–	11	8	3.3	**153359**	**QSMTL-M5-3**	**10**
	1.6	4	8	28.7	3.5	15	–	13.7	8	4.4	**153361**	**QSMTL-M5-4**	**10**
	1.7	6	10.5	31.3	3.5	16	–	15.3	8	5.7	**153363**	**QSMTL-M5-6**	**10**
R thread													
R⅛	2.4	4	8.5	30	8	17	13	13	10	7	**153362**	**QSMTL-⅛-4**	**10**
	3.3	6	10.5	33	8	18	14	15	10	8.5	**153364**	**QSMTL-⅛-6**	**10**
G thread with sealing ring													
G⅛	2.4	4	8	31.2	5.1	17.5	–	13.7	13	10	**186274**	**QSMTL-G⅛-4**	**10**
	3.3	6	10.5	33.8	5.1	18.5	–	15.3	13	12	**186275**	**QSMTL-G⅛-6**	**10**

1) Packaging unit quantity

Push-in T-connector QSMT

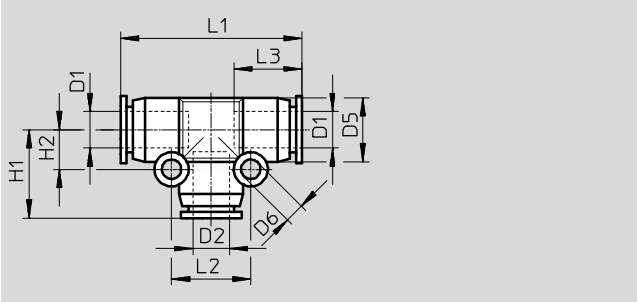

Dimensions and ordering data													
Tubing O.D. D1	Nominal size [mm]	Tubing O.D. D2	D5 ∅	D6 ∅	H1	H2	L1	L2	L3	Weight/ piece [g]	Part No.	Type	PU[1]
2	0.9	2	6	3.2	10.3	4.5	20.5	9	8.4	1.6	**133034**	**QSMT-2**	**10**
3	1.6	3	6	3.2	11	4.5	22	9	9.5	1.7	**153365**	**QSMT-3**	**10**
4	2.4	4	8	3.2	13.7	5.6	27.3	11.2	11.6	3.3	★ **153366**	**QSMT-4**	**10**
											130782	**QSMT-4-100**	**100**
6	3.4	6	10.5	3.2	15.3	6.6	30.5	13.2	11.9	5.3	★ **153367**	**QSMT-6**	**10**
											130783	**QSMT-6-100**	**100**
Reducing													
4	1.7	3	8	3.2	13	5.5	27	11	11.5	3.5	★ **153368**	**QSMT-4-3**	**10**
6	2.6	4	10.5	3.2	15	6.5	30	13	12	4	★ **153369**	**QSMT-6-4**	**10**

1) Packaging unit quantity

Festo core product range	★ Generally ready for shipping ex works in 24 hours ☆ Generally ready for shipping ex works in 5 days

Push-in X-connector QSMX

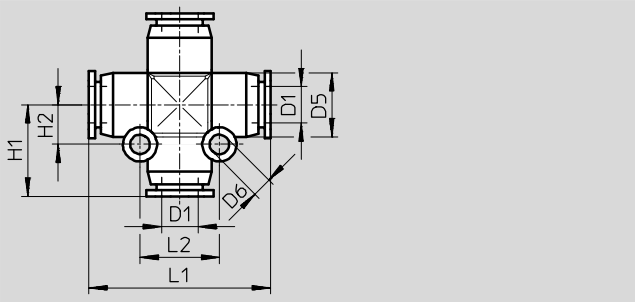

Dimensions and ordering data											
Tubing O.D. D1	Nominal size [mm]	D5 ∅	D6 ∅	H1	H2	L1	L2	Weight/ piece [g]	Part No.	Type	PU[1]
3	1.7	8	3.2	13.5	5.5	27	11	4	**153378**	**QSMX-3**	**10**
4	2.5	8	3.2	13.5	5.5	27	11	4	**153379**	**QSMX-4**	**10**
6	3.3	10.5	3.2	15.5	6.5	31	13	5	**153380**	**QSMX-6**	**10**

1) Packaging unit quantity

Push-in Y-connector QSMY

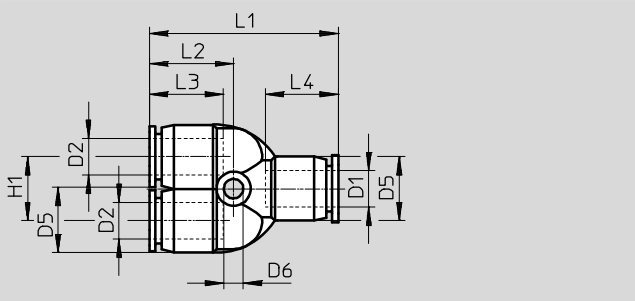

Dimensions and ordering data												
Tubing O.D. D1	Nominal size [mm]	Tubing O.D. D2	D5 ∅	D6 ∅	H1	L1	L2	L3	L4	Weight/ piece [g]	Part No.	Type	PU[1]
2	0.9	2	6	3.2	6.5	19.5	11.8	8.4	8.4	1.7	**133037**	**QSMY-2**	**10**
3	1.6	3	8	3.2	8	28.8	13.2	11.6	11.6	3.7	**153370**	**QSMY-3**	**10**
4	1.7	4	8	3.2	8	28.8	13.2	11.6	11.6	3.5	★ **153371**	**QSMY-4**	**10**
											130786	**QSMY-4-100**	**100**
6	2.9	6	10.5	3.2	10.5	31.6	14.3	11.9	11.9	5.5	★ **153372**	**QSMY-6**	**10**
											130787	**QSMY-6-100**	**100**
Reducing													
4	1.6	3	8	3.2	8	28.8	13.2	11.6	11.6	3.6	★ **153373**	**QSMY-4-3**	**10**
6	2.3	4	10.5	3.2	10.5	31.5	14.2	11.6	11.9	5.3	★ **153374**	**QSMY-6-4**	**10**

1) Packaging unit quantity

Festo core product range	★ Generally ready for shipping ex works in 24 hours ☆ Generally ready for shipping ex works in 5 days

Push-in fittings QS, standard series

Technical data

Push-in fitting QS

Male thread with external hex

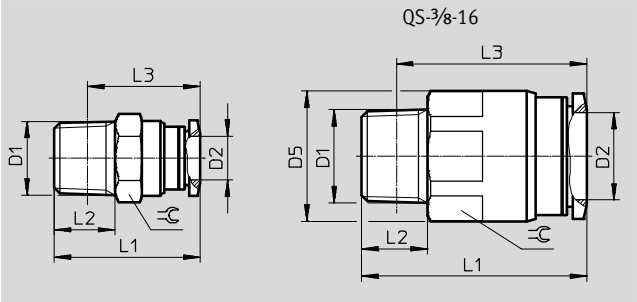

Dimensions and ordering data											
Connection D1	Nominal size [mm]	Tubing O.D. D2	D5	L1	L2	L3	⬡	Weight/ piece [g]	Part No.	Type	PU[1]
R thread											
R1/8	3	4	–	21	8	17	10	7.4	★ 153001	QS-1/8-4	10
									130674	QS-1/8-4-100	100
	5	6	–	22.3	8	18.3	12	8.2	★ 153002	QS-1/8-6	10
									130675	QS-1/8-6-100	100
	6	8	–	27.9	8	23.9	14	14	★ 153004	QS-1/8-8	10
									130676	QS-1/8-8-50	50
	6	10	–	30.3	8	26.3	17	21	★ 190643	QS-1/8-10	10
R1/4	3	4	–	22.5	11	16.5	14	16	★ 190644	QS-1/4-4	10
	5	6	–	23.7	11	17.6	14	15	★ 153003	QS-1/4-6	10
									130677	QS-1/4-6-100	100
	7	8	–	26.6	11	20.6	14	14	★ 153005	QS-1/4-8	10
									130678	QS-1/4-8-50	50
	8.5	10	–	29.8	11	23.8	17	19	★ 153007	QS-1/4-10	10
									130679	QS-1/4-10-50	50
	8.5	12	–	35.9	11	29.9	21	37	★ 164980	QS-1/4-12	10
									130680	QS-1/4-12-20	20
R3/8	5	6	–	24.5	12	18.1	17	28	★ 190645	QS-3/8-6	10
	7	8	–	25.5	12	19.2	17	25	★ 153006	QS-3/8-8	10
									130681	QS-3/8-8-50	50
	9	10	–	29.3	12	23	17	24	★ 153008	QS-3/8-10	10
									130682	QS-3/8-10-50	50
	11	12	–	31.9	12	25.6	21	30	★ 153009	QS-3/8-12	10
									130683	QS-3/8-12-20	20
	11	16	23.8	41,1	12	34.8	22	50	164957	QS-3/8-16	1
R1/2	9	10	–	30.4	15	22.2	21	46	★ 190646	QS-1/2-10	1
									133189	QS-1/2-10-50	50
	11	12	–	33.9	15	25.7	21	44	★ 153010	QS-1/2-12	1
									130684	QS-1/2-12-20	20
	13	16	–	41.3	15	33.1	24	63	153011	QS-1/2-16	1
									130685	QS-1/2-16-20	20

1) Packaging unit quantity

Festo core product range	★ Generally ready for shipping ex works in 24 hours ☆ Generally ready for shipping ex works in 5 days

Push-in fittings QS, standard series

Technical data

Push-in fitting QS

Male thread with external hex

G thread

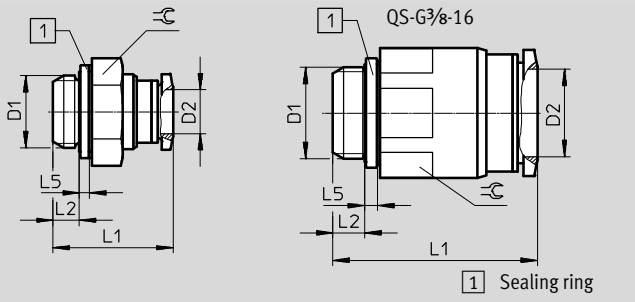

Dimensions and ordering data										
Connection D1	Nominal size [mm]	Tubing O.D. D2	L1	L2	L5	⇌	Weight/ piece [g]	Part No.	Type	PU[1]
G thread with sealing ring										
G⅛	3	4	19.5	4.2	1.9	13	9.1	★ 186095	QS-G⅛-4	10
								132036	QS-G⅛-4-100	100
	5	6	20.6	4.2	1.9	13	8.3	★ 186096	QS-G⅛-6	10
								132037	QS-G⅛-6-100	100
	6	8	25.8	4.2	1.9	14	13	★ 186098	QS-G⅛-8	10
								132038	QS-G⅛-8-50	50
G¼	5	6	21.2	4.8	1.9	17	17	★ 186097	QS-G¼-6	10
								132039	QS-G¼-6-100	100
	7	8	21.9	4.8	1.9	17	15	★ 186099	QS-G¼-8	10
								132040	QS-G¼-8-50	50
	8.5	10	28.9	4.8	1.9	17	21	★ 186101	QS-G¼-10	10
								132041	QS-G¼-10-50	50
	8.5	12	34.1	4.8	1.9	21	39	★ 186350	QS-G¼-12	10
								132042	QS-G¼-12-20	20
G⅜	7	8	21.7	5.8	2.4	19	22	★ 186100	QS-G⅜-8	10
								132043	QS-G⅜-8-50	50
	9	10	25.4	5.8	2.4	19	22	★ 186102	QS-G⅜-10	10
								132044	QS-G⅜-10-50	50
	11	12	31.5	5.8	2.4	21	33	★ 186103	QS-G⅜-12	10
								132045	QS-G⅜-12-20	20
	11	16	37.3	5.8	2.4	22	45	186347	QS-G⅜-16	1
G½	11	12	28	6.8	2.4	24	39	★ 186104	QS-G½-12	1
								132046	QS-G½-12-20	20
	13	16	35.3	6.8	2.4	24	51	186105	QS-G½-16	1
								132047	QS-G½-16-20	20

1) Packaging unit quantity

Festo core product range	★ Generally ready for shipping ex works in 24 hours ☆ Generally ready for shipping ex works in 5 days

Push-in fitting QS-G¾-22
Male thread with external hex

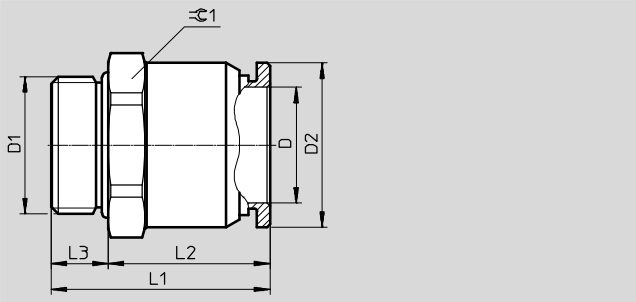

Dimensions and ordering data											
Connection D1	Nominal size [mm]	Tubing O.D. D	D2 ∅	L1	L2	L3	⬡ 1	Weight/ piece [g]	Part No.	Type	PU[1]
G thread with sealing ring											
G¾	20	22	31.6	42.1	31.1	11	32	93.2	**8040613**	**QS-G¾-22**	**1**

1) Packaging unit quantity

Push-in fitting QS-...-I
Male thread with internal hex

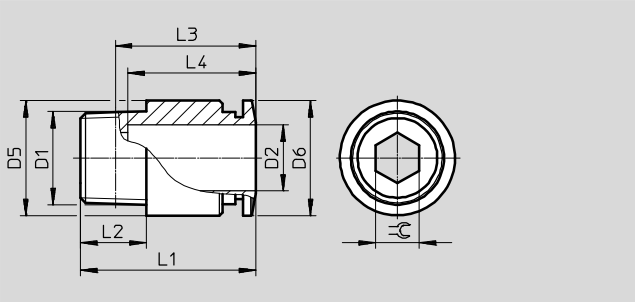

Dimensions and ordering data														
Connection D1	Nominal size [mm]	Tubing O.D. D2	D5 ∅	D6 ∅	L1	L2	L3	L4	L5	⇌	Weight/ piece [g]	Part No.	Type	PU[1]
R thread														
R⅛	2.6	4	9.7	9.9	20	8	16	14.9	–	2.5	6.6	★ 153012	QS-⅛-4-I	10
												133191	QS-⅛-4-I-100	100
	4.2	6	11.8	11.8	22.1	8	18.1	17	–	4	7.6	★ 153013	QS-⅛-6-I	10
												133186	QS-⅛-6-I-100	100
	5.3	8	13.7	13.8	25.9	8	21.9	18.2	–	5	8.8	★ 153015	QS-⅛-8-I	10
												133187	QS-⅛-8-I-50	50
	5.3	10	17.5	16.8	30.3	8	26.3	20.7	–	5	17	★ 190647	QS-⅛-10-I	10
R¼	4.2	6	13.7	11.8	21.3	11	15.2	17	–	4	13	★ 153014	QS-¼-6-I	10
												133193	QS-¼-6-I-100	100
	6.3	8	13.7	13.8	25.1	11	19.1	18.2	–	6	13	★ 153016	QS-¼-8-I	10
												133190	QS-¼-8-I-50	50
	6.3	10	17.5	16.8	29.8	11	23.8	20.7	–	6	20	★ 153018	QS-¼-10-I	10
												133188	QS-¼-10-I-50	50
	6.3	12	20.8	19.8	35.9	11	29.9	23.3	–	6	29	★ 190649	QS-¼-12-I	10
R⅜	6.3	8	16.8	13.8	22.2	12	15.9	18.2	–	6	19	★ 153017	QS-⅜-8-I	10
	6.3	10	17.5	16.8	29.3	12	23	20.7	–	6	26	★ 153019	QS-⅜-10-I	10
	8.4	12	20.8	19.8	31.9	12	25.6	23.3	–	8	31	★ 153020	QS-⅜-12-I	10
R½	6.3	10	20.8	16.8	30.3	15	22.1	20.7	–	6	45	★ 190648	QS-½-10-I	1
	8.4	12	20.8	19.8	33.9	15	25.7	23.3	–	8	45	★ 153021	QS-½-12-I	1

1) Packaging unit quantity

Festo core product range
★ Generally ready for shipping ex works in 24 hours
☆ Generally ready for shipping ex works in 5 days

Push-in fitting QS-...-I
Male thread with internal hex

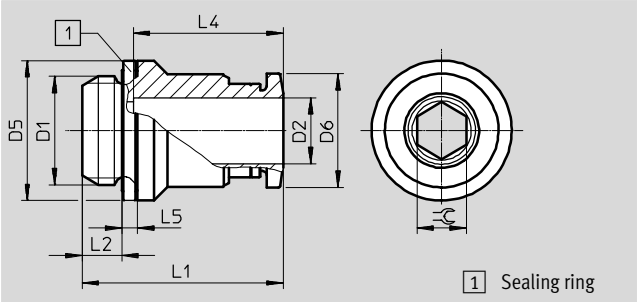

Dimensions and ordering data														
Connection D1	Nominal size [mm]	Tubing O.D. D2	D5 ∅	D6 ∅	L1	L2	L3	L4	L5	⇌	Weight/ piece [g]	Part No.	Type	PU[1]
G thread with sealing ring														
G⅛	2.6	4	13	9.9	19.5	4.2	–	14.9	1.9	2.5	7.7	★ **186106**	**QS-G⅛-4-I**	**10**
												133008	**QS-G⅛-4-I-100**	**100**
	4.2	6	13	11.8	21.6	4.2	–	17	1.9	4	8.3	★ **186107**	**QS-G⅛-6-I**	**10**
												133009	**QS-G⅛-6-I-100**	**100**
	5.3	8	13.7	13.8	25.8	4.2	–	18.2	1.9	5	12	★ **186109**	**QS-G⅛-8-I**	**10**
												133010	**QS-G⅛-8-I-100**	**100**
	5.3	10	17	16.8	28.3	4.2	–	20.7	1.9	5	19	★ **132999**	**QS-G⅛-10-I**	**10**
												133000	**QS-G⅛-10-I-100**	**100**
G¼	4.2	6	17	11.8	20.2	4.8	–	17	1.9	4	13	★ **186108**	**QS-G¼-6-I**	**10**
	6.3	8	17	13.8	24.4	4.8	–	18.2	1.9	6	14	★ **186110**	**QS-G¼-8-I**	**10**
	7.3	10	17	16.8	28.9	4.8	–	20.7	1.9	7	20	★ **186112**	**QS-G¼-10-I**	**10**
G⅜	6.3	8	19	13.8	23.9	5.8	–	18.2	2.4	6	20	★ **186111**	**QS-G⅜-8-I**	**10**
	7.3	10	19	16.8	26.4	5.8	–	20.7	2.4	7	22	★ **186113**	**QS-G⅜-10-I**	**10**
	8.4	12	20.8	19.8	31.5	5.8	–	23.3	2.4	8	34	★ **186114**	**QS-G⅜-12-I**	**10**
G½	8.4	12	24	19.8	28	6.8	–	23.3	2.4	8	33	★ **186115**	**QS-G½-12-I**	**1**

1) Packaging unit quantity

Festo core product range
★ Generally ready for shipping ex works in 24 hours
☆ Generally ready for shipping ex works in 5 days

Push-in fittings QS, standard series

Technical data

Push-in fitting QSF

Female thread with external hex

G thread

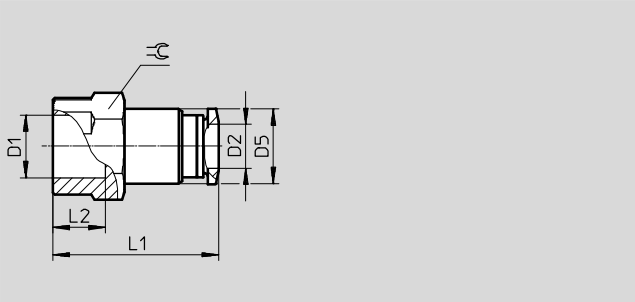

Dimensions and ordering data

Connection D1	Nominal size [mm]	Tubing O.D. D2	D5 ∅	L1	L2	⇌	Weight/ piece [g]	Part No.	Type	PU[1]
G thread										
G⅛	3	4	9.7	23.9	7	14	13	★ **153022**	**QSF-⅛-4-B**	**10**
								130709	**QSF-⅛-4-B-100**	**100**
	5	6	11.8	26	7	14	15	★ **153023**	**QSF-⅛-6-B**	**10**
								130710	**QSF-⅛-6-B-100**	**100**
	7	8	13.7	27.2	7	14	16	★ **153025**	**QSF-⅛-8-B**	**10**
								130711	**QSF-⅛-8-B-50**	**50**
G¼	3	4	9.7	26.9	9.5	17	21	★ **190650**	**QSF-¼-4-B**	**10**
	5	6	11.8	29	9.5	17	23	★ **153024**	**QSF-¼-6-B**	**10**
								130712	**QSF-¼-6-B-100**	**100**
	7	8	13.7	30.2	9.5	17	24	★ **153026**	**QSF-¼-8-B**	**10**
								130713	**QSF-¼-8-B-50**	**50**
	9	10	17.5	32.7	9.5	17	30	★ **153028**	**QSF-¼-10-B**	**10**
								130714	**QSF-¼-10-B-50**	**50**
	11	12	20.8	34.8	9.5	21	44	★ **190651**	**QSF-¼-12-B**	**10**
G⅜	5	6	11.8	30.5	11	21	30	★ **190652**	**QSF-⅜-6-B**	**10**
	7	8	13.7	31.7	11	21	32	★ **153027**	**QSF-⅜-8-B**	**10**
								130715	**QSF-⅜-8-B-50**	**50**
	9	10	17.5	34.2	11	21	38	★ **153029**	**QSF-⅜-10-B**	**10**
								130716	**QSF-⅜-10-B-50**	**50**
	11	12	20.8	36.8	11	21	46	★ **153030**	**QSF-⅜-12-B**	**10**
								130717	**QSF-⅜-12-B-20**	**20**
G½	11	12	20.8	40.1	14	24	56	★ **190653**	**QSF-½-12-B**	**1**
	15	16	25	41.6	14	25	69	**190654**	**QSF-½-16-B**	**1**

1) Packaging unit quantity

Festo core product range

★ Generally ready for shipping ex works in 24 hours
☆ Generally ready for shipping ex works in 5 days

Push-in fittings QS, standard series

Technical data

Push-in connector QS

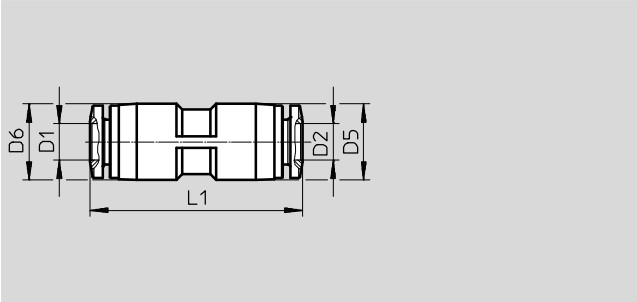

Dimensions and ordering data									
Tubing O.D. D1	Nominal size [mm]	Tubing O.D. D2	D5 ∅	D6	L1	Weight/ piece [g]	Part No.	Type	PU[1]
4	2.6	4	10	–	30.8	5	★ **153031**	**QS-4**	**10**
							130686	**QS-4-100**	**100**
6	4	6	12.5	–	34.9	6.5	★ **153032**	**QS-6**	**10**
							130687	**QS-6-100**	**100**
8	5	8	14.5	–	37.8	9.5	★ **153033**	**QS-8**	**10**
							130688	**QS-8-50**	**50**
10	6.7	10	17.5	–	41.4	16	★ **153034**	**QS-10**	**10**
							130689	**QS-10-50**	**50**
12	8.7	12	21	–	47.8	22	★ **153035**	**QS-12**	**10**
							130690	**QS-12-20**	**20**
16	13.7	16	25	–	50	25	**153036**	**QS-16**	**1**
							133195	**QS-16-20**	**20**
Reducing									
6	2.6	4	12.5	12.5	34.4	6.4	★ **153037**	**QS-6-4**	**10**
							130691	**QS-6-4-100**	**100**
8	2.3	4	10.7	14.5	36.6	7.2	★ **130606**	**QS-8-4**	**10**
	4	6	14.5	14.5	37.9	8.8	★ **153038**	**QS-8-6**	**10**
							130692	**QS-8-6-50**	**50**
10	3.7	6	13	17.5	39.8	12	★ **130607**	**QS-10-6**	**10**
	5	8	17.5	17.5	41.1	14	★ **153039**	**QS-10-8**	**10**
							130693	**QS-10-8-50**	**50**
12	5.2	8	14.5	21	44	16	★ **130608**	**QS-12-8**	**10**
	6.7	10	21	21	47.6	21	★ **153040**	**QS-12-10**	**10**
							130694	**QS-12-10-20**	**20**

1) Packaging unit quantity

Festo core product range

★ Generally ready for shipping ex works in 24 hours
☆ Generally ready for shipping ex works in 5 days

Push-in bulkhead connector QSS

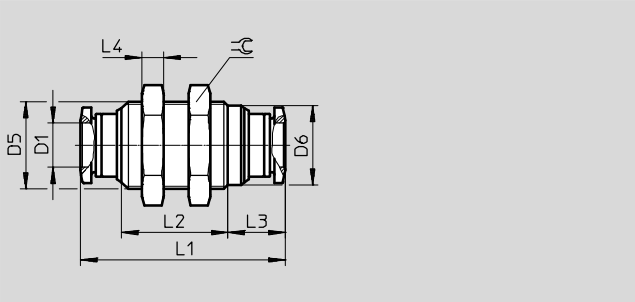

Push-in bulkhead connector
QSS-...-F
with fixed collar

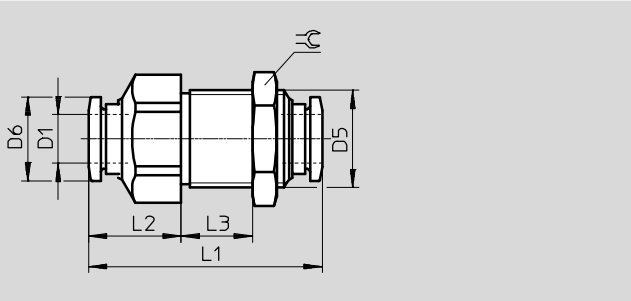

Dimensions and ordering data												
Tubing O.D. D1	Nominal size [mm]	D5	D6 ∅	L1	L2	L3	L4	⌀	Weight/ piece [g]	Part No.	Type	PU[1]
4	3	M12x1	10.8	30.8	14.8	9.5	4	14	11	★ **153157**	**QSS-4**	**10**
										130788	**QSS-4-100**	**100**
6	5	M14x1	12.5	34.9	19	9.5	4	17	16	★ **153158**	**QSS-6**	**10**
										130789	**QSS-6-100**	**100**
8	7	M16x1	14.6	37.4	19.4	10.5	4	19	19	★ **153159**	**QSS-8**	**10**
										130790	**QSS-8-50**	**50**
10	9	M20x1	18.5	42.4	21.6	11.9	5	24	35	★ **153160**	**QSS-10**	**10**
										130791	**QSS-10-50**	**50**
12	11	M22x1	20.4	47.6	24.2	13.2	6	27	52	★ **153161**	**QSS-12**	**10**
										130792	**QSS-12-20**	**20**
With fixed collar												
4	2.6	M12x1	9.9	33	13	10	–	14	–	**193950**	**QSS-4-F**	**10**
6	4.0	M14x1	11.8	34.9	14.4	10	–	17	–	**193951**	**QSS-6-F**	**10**
8	5.5	M16x1	13.8	38.4	15.2	13	–	19	40	★ **130642**	**QSS-8-F**	**10**
10	6.5	M20x1	16.8	47.1	20.3	15	–	24	86	★ **130643**	**QSS-10-F**	**10**
12	7.5	M22x1	19.8	48.5	18.9	17.5	–	27	105	★ **130644**	**QSS-12-F**	**10**

1) Packaging unit quantity

Festo core product range
★ Generally ready for shipping ex works in 24 hours
☆ Generally ready for shipping ex works in 5 days

Push-in bulkhead connector QSSF
with female thread

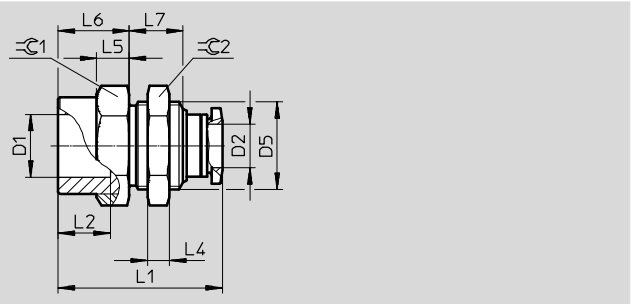

Dimensions and ordering data

Connection D1	Nominal size [mm]	Tubing O.D. D2	D5 ∅	L1	L2	L4	L5	L6	L7	⌀ 1	⌀ 2	Weight/ piece [g]	Part No.	Type	PU[1]
G⅛	3	4	M12x1	24.2	7	4	5	9	9	14	14	17	**153162**	**QSSF-⅛-4-B**	**10**
	5	6	M14x1	26.4	7	4	6	10	10.2	17	17	25	**153163**	**QSSF-⅛-6-B**	**10**
	7	8	M16x1	27	7	4	6	10	9.8	19	19	30	**153165**	**QSSF-⅛-8-B**	**10**
G¼	3	4	M12x1	27.5	9.5	4	6	12.3	9	17	14	24	**190655**	**QSSF-¼-4-B**	**10**
	5	6	M14x1	28.7	9.5	4	6	12.3	10.2	17	17	27	**153164**	**QSSF-¼-6-B**	**10**
	7	8	M16x1	30	9.5	4	6	13	9.8	19	19	34	**153166**	**QSSF-¼-8-B**	**10**
	9	10	M20x1	32.7	9.5	5	7	13	11.1	24	24	57	**153168**	**QSSF-¼-10-B**	**10**
G⅜	5	6	M14x1	30.9	11	4	6.5	14.5	10.2	21	17	36	**190656**	**QSSF-⅜-6-B**	**10**
	7	8	M16x1	31.5	11	4	6.5	14.5	9.8	21	19	38	**153167**	**QSSF-⅜-8-B**	**10**
	9	10	M20x1	34.2	11	5	7	14.5	11.1	24	24	57	**153169**	**QSSF-⅜-10-B**	**10**
	11	12	M22x1	36.8	11	6	7	14.5	12.4	24	27	66	**153170**	**QSSF-⅜-12-B**	**10**
G½	11	12	M22x1	40.1	14	6	7	17.8	12.4	24	27	70	**153171**	**QSSF-½-12-B**	**1**
	15	16	M27x1.5	42.6	14	9	8.5	17.3	15.4	29	32	116	**190657**	**QSSF-½-16-B**	**1**

1) Packaging unit quantity

Push-in cap QSC

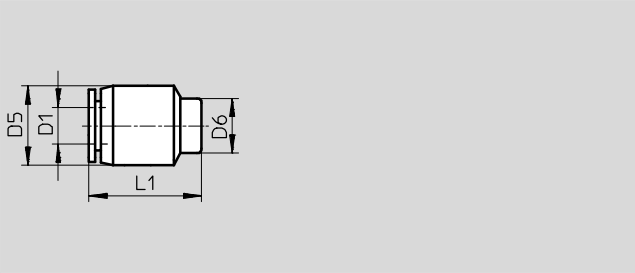

Dimensions and ordering data							
Tubing O.D. D1	D5 ∅	D6 ∅	L1	Weight/ piece [g]	Part No.	Type	PU[1]
4	10	7	16.5	2.5	★ **153262**	**QSC-4**	**10**
					130704	**QSC-4-100**	**100**
6	13	9	18.5	3.5	★ **153263**	**QSC-6**	**10**
					130705	**QSC-6-100**	**100**
8	15	11	20	5	★ **153264**	**QSC-8**	**10**
					130706	**QSC-8-50**	**50**
10	18	13	22.5	8	★ **153265**	**QSC-10**	**10**
					130707	**QSC-10-50**	**50**
12	21.5	16	23	11.5	★ **153266**	**QSC-12**	**10**
					130708	**QSC-12-20**	**20**

1) Packaging unit quantity

Festo core product range	★ Generally ready for shipping ex works in 24 hours ☆ Generally ready for shipping ex works in 5 days

Push-in connector QS-...H
with push-in sleeve

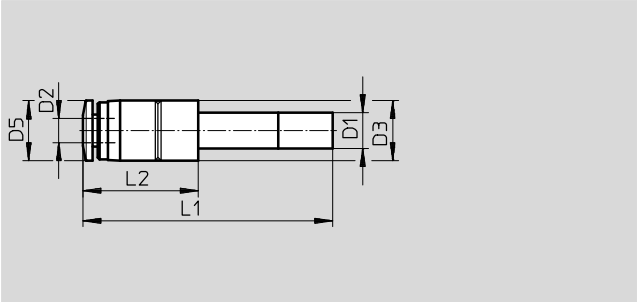

Dimensions and ordering data										
Push-in sleeve ∅ D1	Nominal size [mm]	Tubing O.D. D2	D3 ∅	D5 ∅	L1	L2	Weight/ piece [g]	Part No.	Type	PU[1]
6	2.5	4	10	9.9	37.7	15.2	2.9	★ **153041**	**QS-6H-4**	**10**
								130695	**QS-6H-4-100**	**100**
8	2.4	4	12.5	9.9	40.2	16.7	3.8	★ **130622**	**QS-8H-4**	**10**
	3.8	6	12.5	11.8	40.8	17.3	4	★ **153042**	**QS-8H-6**	**10**
								130696	**QS-8H-6-50**	**50**
10	3.8	6	12.5	11.8	43.8	18.8	4.5	★ **130623**	**QS-10H-6**	**10**
	5.4	8	14.5	13.8	43.7	18.7	5.8	★ **153043**	**QS-10H-8**	**10**
								130697	**QS-10H-8-50**	**50**
12	3.8	6	14.5	11.8	48.8	19.8	6.0	★ **132981**	**QS-12H-6**	**10**
	5.4	8	14.5	13.8	49.7	20.7	6.7	★ **130624**	**QS-12H-8**	**10**
	6.3	10	17.5	16.8	50	21	9.6	★ **153044**	**QS-12H-10**	**10**
								130698	**QS-12H-10-20**	**20**

1) Packaging unit quantity

Festo core product range
★ Generally ready for shipping ex works in 24 hours
☆ Generally ready for shipping ex works in 5 days

Push-in sleeve QSH

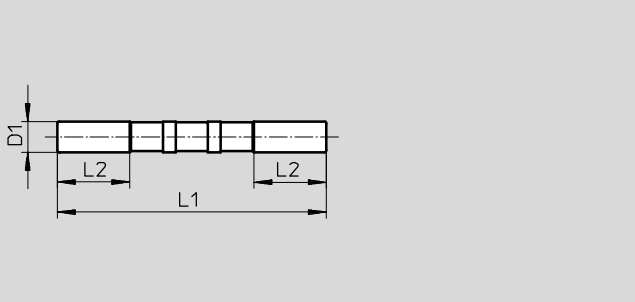

Reducing

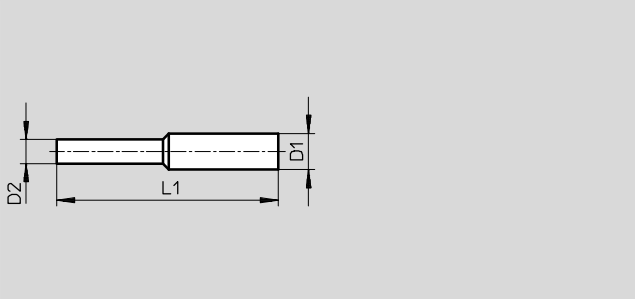

Dimensions and ordering data								
Push-in sleeve ∅ D1	Nominal size [mm]	Push-in sleeve ∅ D2	L1	L2	Weight/ piece [g]	Part No.	Type	PU[1]
4	2.5	–	34.8	11.3	0.5	**153251**	**QSH-4**	**10**
						130723	**QSH-4-100**	**100**
6	4	–	38.2	11.3	0.5	**153252**	**QSH-6**	**10**
						130724	**QSH-6-100**	**100**
8	6	–	41.4	12.1	1	**153253**	**QSH-8**	**10**
						130725	**QSH-8-50**	**50**
10	7.5	–	46.2	13	1.5	**153254**	**QSH-10**	**10**
						130726	**QSH-10-50**	**50**
12	9	–	52.8	17.5	3	**153255**	**QSH-12**	**10**
						130727	**QSH-12-20**	**20**
16	11	–	55.6	18	4	**153256**	**QSH-16**	**1**
Reducing								
6	2.3	4	36.7	–	0.5	**153257**	**QSH-6-4**	**10**
						130718	**QSH-6-4-100**	**100**
8	2.3	4	41.1	–	0.9	**130625**	**QSH-8-4**	**10**
	3.8	6	40.5	–	0.9	**153258**	**QSH-8-6**	**10**
						130719	**QSH-8-6-50**	**50**
10	3.8	6	43.7	–	1.4	**130626**	**QSH-10-6**	**10**
	4.9	8	44	–	1.3	**153259**	**QSH-10-8**	**10**
						130720	**QSH-10-8-50**	**50**
12	4.9	8	47.5	–	2.1	**130627**	**QSH-12-8**	**10**
	7.1	10	49.6	–	2.2	**153260**	**QSH-12-10**	**10**
						130721	**QSH-12-10-20**	**20**
16	7.8	12	54.4	–	4.2	**153261**	**QSH-16-12**	**1**
						130722	**QSH-16-12-20**	**20**

1) Packaging unit quantity

Blanking plug QSC-...H

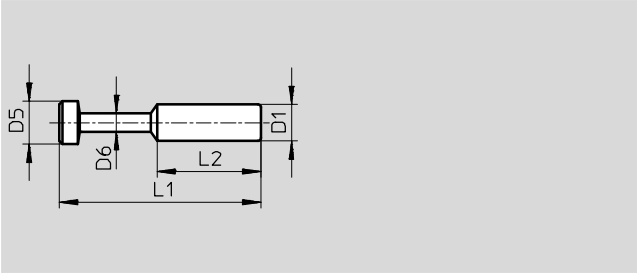

Dimensions and ordering data								
Push-in sleeve ∅ D1	D5 ∅	D6 ∅	L1	L2	Weight/ piece [g]	Part No.	Type	PU[1]
4	5	3	28	15	0.5	★ **153267**	**QSC-4H**	**10**
						130699	**QSC-4H-100**	**100**
6	7	3	33	17	0.5	★ **153268**	**QSC-6H**	**10**
						130700	**QSC-6H-100**	**100**
8	9	4	37	18	1	★ **153269**	**QSC-8H**	**10**
						130701	**QSC-8H-50**	**50**
10	11	5	42	20.5	2	★ **153270**	**QSC-10H**	**10**
						130702	**QSC-10H-50**	**50**
12	13	6	44	23	2.5	★ **153271**	**QSC-12H**	**10**
						130703	**QSC-12H-20**	**20**
16	17	8	46	24	4	**153272**	**QSC-16H**	**1**

1) Packaging unit quantity

Festo core product range	★ Generally ready for shipping ex works in 24 hours ☆ Generally ready for shipping ex works in 5 days

Push-in L-fitting QSL
Orientable
Male thread with external hex

R thread

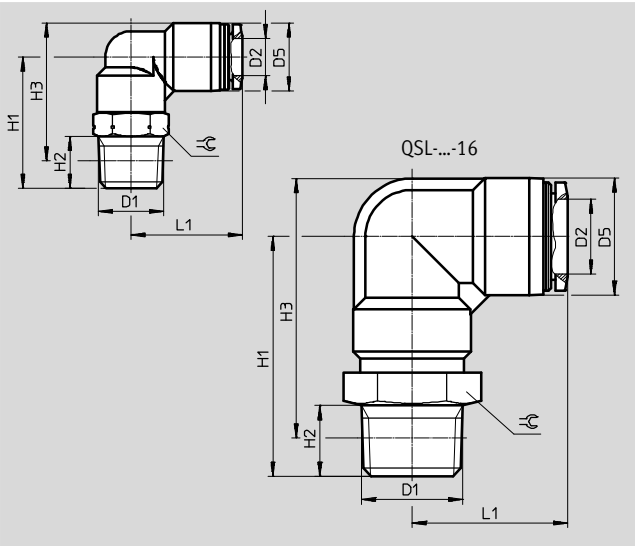

Dimensions and ordering data												
Connection D1	Nominal size [mm]	Tubing O.D. D2	D5 ∅	H1	H2	H3	L1	⇌	Weight/ piece [g]	Part No.	Type	PU[1]
R thread												
R⅛	2.8	4	10	22	8	23	18.7	10	10	★ 153045	QSL-⅛-4	10
										130728	QSL-⅛-4-100	100
	4.2	6	12.5	22.5	8	24.8	20.3	10	11	★ 153046	QSL-⅛-6	10
										130729	QSL-⅛-6-100	100
	6	8	14.5	24	8	27.3	22.7	12	14	★ 153048	QSL-⅛-8	10
										130730	QSL-⅛-8-50	50
	6	10	17.5	25	8	29.8	25.5	12	18	★ 190658	QSL-⅛-10	10
R¼	2.8	4	10	29	11	28	20.7	14	18	★ 190659	QSL-¼-4	10
	4.3	6	12.5	28	11	28.2	21.8	14	19	★ 153047	QSL-¼-6	10
										130731	QSL-¼-6-100	100
	6.7	8	14.5	28	11	29.2	23.7	14	20	★ 153049	QSL-¼-8	10
										130732	QSL-¼-8-50	50
	8	10	17.5	28.5	11	31.2	26	14	23	★ 153051	QSL-¼-10	10
										130733	QSL-¼-10-50	50
	8	12	21	29.8	11	34.2	29	14	27	★ 164981	QSL-¼-12	10
										130734	QSL-¼-12-20	20
R⅜	4.3	6	12.5	31.5	12	31.4	23.8	17	30	★ 190660	QSL-⅜-6	10
	6.7	8	14.5	31	12	31.9	24.7	17	31	★ 153050	QSL-⅜-8	10
										130735	QSL-⅜-8-50	50
	8.3	10	17.5	32	12	34.4	27	17	34	★ 153052	QSL-⅜-10	10
										130736	QSL-⅜-10-20	20
	10	12	21	32.5	12	36.7	29.7	17	38	★ 153053	QSL-⅜-12	10
										130737	QSL-⅜-12-20	20
	11	16	25	47	11	53.2	33.1	22	74	164958	QSL-⅜-16	1
R½	8.3	10	17.5	36	15	36.6	27.5	21	57	★ 190661	QSL-½-10	1
										133192	QSL-½-10-50	50
	10.3	12	21	36.5	15	38.8	30.7	21	61	★ 153054	QSL-½-12	1
										130738	QSL-½-12-20	20
	13	16	25	51	15	55.3	33.1	22	79	153055	QSL-½-16	1
										130739	QSL-½-16-20	20

1) Packaging unit quantity

Festo core product range
★ Generally ready for shipping ex works in 24 hours
☆ Generally ready for shipping ex works in 5 days

Push-in L-fitting QSL
Orientable
Male thread with external hex

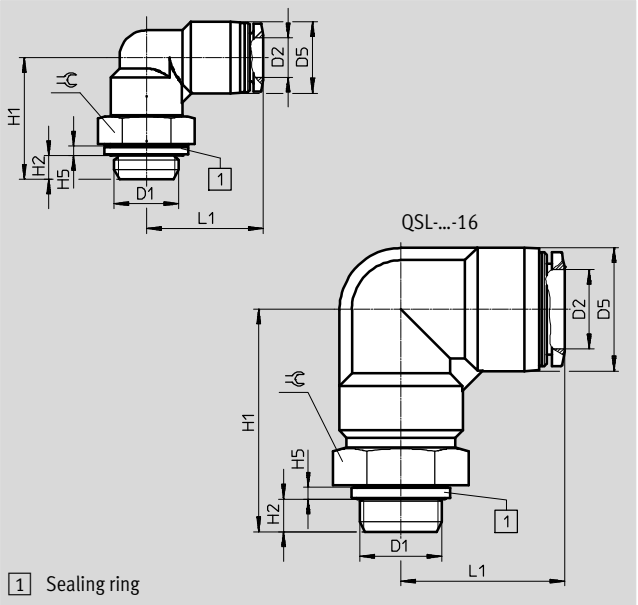

Dimensions and ordering data												
Connection D1	Nominal size [mm]	Tubing O.D. D2	D5 ∅	H1	H2	H5	L1	⬡	Weight/ piece [g]	Part No.	Type	PU[1]
G thread with sealing ring												
G⅛	2.8	4	10	21.1	4.2	1.9	18.7	13	13	★ 186116	QSL-G⅛-4	10
										132048	QSL-G⅛-4-100	100
	4.2	6	12.5	21.6	4.2	1.9	20.3	13	14	★ 186117	QSL-G⅛-6	10
										132049	QSL-G⅛-6-100	100
	6	8	14.5	22.1	4.2	1.9	22.7	13	15	★ 186119	QSL-G⅛-8	10
										132050	QSL-G⅛-8-50	50
G¼	4.3	6	12.5	24.7	4.8	1.9	21.8	17	21	★ 186118	QSL-G¼-6	10
										132051	QSL-G¼-6-100	100
	6.7	8	14.5	24.7	4.8	1.9	23.7	17	23	★ 186120	QSL-G¼-8	10
										132052	QSL-G¼-8-50	50
	8	10	17.5	25.2	4.8	1.9	26	17	26	★ 186122	QSL-G¼-10	10
										132053	QSL-G¼-10-50	50
	8	12	21	26.5	4.8	1.9	29	17	29	★ 186351	QSL-G¼-12	10
										132054	QSL-G¼-12-20	20
G⅜	6.7	8	14.5	27.2	5.8	2.4	24.7	19	30	★ 186121	QSL-G⅜-8	10
										132055	QSL-G⅜-8-50	50
	8.3	10	17.5	28.2	5.8	2.4	27	19	33	★ 186123	QSL-G⅜-10	10
										132056	QSL-G⅜-10-20	20
	10	12	21	28.7	5.8	2.4	29.7	19	37	★ 186124	QSL-G⅜-12	10
										132057	QSL-G⅜-12-20	20
	11	16	25	44.2	5.8	2.4	33.1	24	77	186348	QSL-G⅜-16	1
G½	10.3	12	21	32.2	6.8	2.4	30.7	24	67	★ 186125	QSL-G½-12	1
										132058	QSL-G½-12-20	20
	13	16	25	45.2	6.8	2.4	33.1	24	75	186126	QSL-G½-16	1
										132059	QSL-G½-16-20	20

1) Packaging unit quantity

Festo core product range
★ Generally ready for shipping ex works in 24 hours
☆ Generally ready for shipping ex works in 5 days

Push-in long L-fitting QSLL
Orientable
Male thread with external hex

R thread

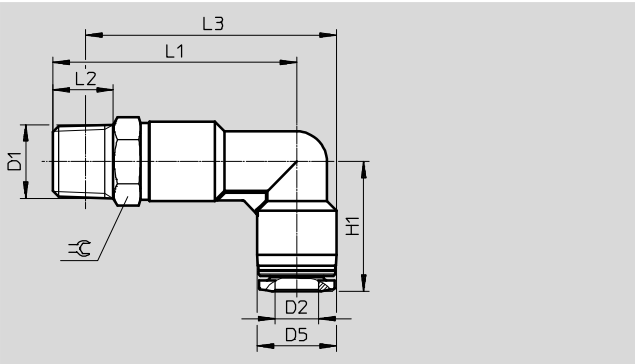

Dimensions and ordering data												
Connection D1	Nominal size [mm]	Tubing O.D. D2	D5 ∅	H1	L1	L2	L3	⇌	Weight/ piece [g]	Part No.	Type	PU[1]
R thread												
R⅛	2.8	4	10	18.7	34	8	35	10	11	★ **153076**	**QSLL-⅛-4**	**10**
	4.3	6	12.5	20.3	37	8	39.3	10	13	★ **153077**	**QSLL-⅛-6**	**10**
	6	8	14.5	22.7	40.5	8	43.8	12	16	★ **153079**	**QSLL-⅛-8**	**10**
R¼	2.8	4	10	20.7	41	11	40	14	19	★ **190662**	**QSLL-¼-4**	**10**
	4.3	6	12.5	21.8	42.5	11	42.7	14	20	★ **153078**	**QSLL-¼-6**	**10**
	6.7	8	14.5	23.7	44.5	11	45.7	14	22	★ **153080**	**QSLL-¼-8**	**10**
	8	10	17.5	26	48	11	50.7	14	26	★ **153082**	**QSLL-¼-10**	**10**
R⅜	4.3	6	12.5	23.8	46	12	45.9	17	33	★ **190663**	**QSLL-⅜-6**	**10**
	6.7	8	14.5	24.7	47.5	12	48.4	17	35	★ **153081**	**QSLL-⅜-8**	**10**
	8.3	10	17.5	27	51.5	12	53.9	17	38	★ **153083**	**QSLL-⅜-10**	**10**
	10	12	21	29.7	55.5	12	59.7	17	42	★ **153084**	**QSLL-⅜-12**	**10**
R½	8.3	10	17.5	27	55.5	15	56.1	21	63	★ **190664**	**QSLL-½-10**	**1**
	10.3	12	21	29.7	59.5	15	61.8	21	68	★ **153085**	**QSLL-½-12**	**1**

1) Packaging unit quantity

Festo core product range
★ Generally ready for shipping ex works in 24 hours
☆ Generally ready for shipping ex works in 5 days

Push-in long L-fitting QSLL
Orientable
Male thread with external hex

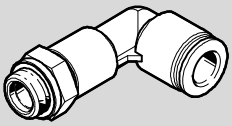

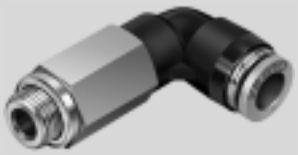

QSLL-G½-16

G thread

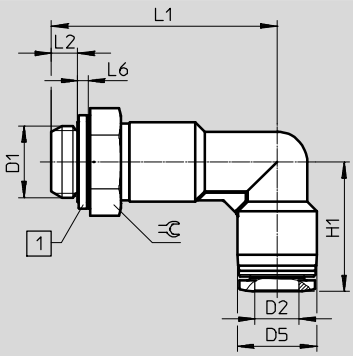

QSLL-G½-16

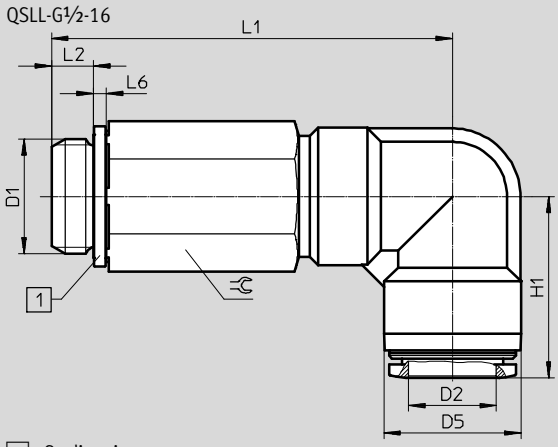

1 Sealing ring

Dimensions and ordering data												
Connection D1	Nominal size [mm]	Tubing O.D. D2	D5 ∅	H1	L1	L2	L6	⌀	Weight/ piece [g]	Part No.	Type	PU[1]
G thread with sealing ring												
G⅛	2.8	4	10	18.7	33.1	4.2	1.9	13	14	**186127**	**QSLL-G⅛-4**	**10**
										133015	**QSLL-G⅛-4-100**	**100**
	4.3	6	12.5	20.3	36.1	4.2	1.9	13	15	**186128**	**QSLL-G⅛-6**	**10**
										133016	**QSLL-G⅛-6-100**	**100**
	6	8	14.5	22.7	38.6	4.2	1.9	13	17	**186130**	**QSLL-G⅛-8**	**10**
										133017	**QSLL-G⅛-8-100**	**100**
G¼	4.3	6	12.5	21.8	39.2	4.8	1.9	17	25	**186129**	**QSLL-G¼-6**	**10**
	6.7	8	14.5	23.7	41.2	4.8	1.9	17	27	**186131**	**QSLL-G¼-8**	**10**
	8	10	17.5	26	44.7	4.8	1.9	17	31	**186133**	**QSLL-G¼-10**	**10**
	8	12	21	29	49.5	4.8	1.9	17	35	**132596**	**QSLL-G¼-12**	**1**
G⅜	6.7	8	14.5	24.7	43.7	5.8	2.4	19	34	**186132**	**QSLL-G⅜-8**	**10**
	8.3	10	17.5	27	47.7	5.8	2.4	19	37	**186134**	**QSLL-G⅜-10**	**10**
	10	12	21	29.7	51.7	5.8	2.4	19	41	**186135**	**QSLL-G⅜-12**	**10**
G½	10.3	12	21	29.7	55.2	6.8	2.4	24	75	**186136**	**QSLL-G½-12**	**1**
	13	16	25	33.1	72.2	6.8	2.4	24	158	**190665**	**QSLL-G½-16**	**1**

1) Packaging unit quantity

Push-in L-fitting QSLF
Female thread with external hex

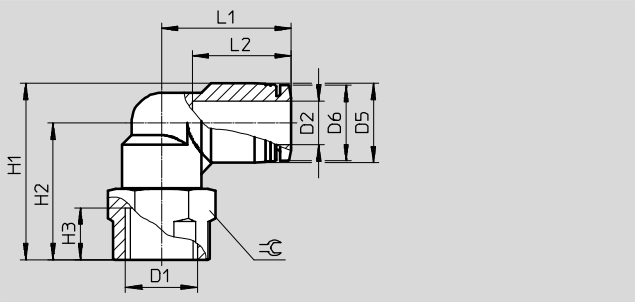

Dimensions and ordering data														
Connection D1	Nominal size [mm]	Tubing O.D. D2	D5 ∅	D6 ∅	H1	H2	H3	L1	L2	⌀	Weight/ piece [g]	Part No.	Type	PU[1]
G thread														
G⅛	2.8	4	10	9.9	25	20	7	18.7	14.9	14	14	★ **153273**	**QSLF-⅛-4-B**	**10**
	4.2	6	12.5	11.8	26.8	20.5	7	20.3	17	14	15	★ **153274**	**QSLF-⅛-6-B**	**10**
	6	8	14.5	13.8	28.3	21	7	22.7	18.1	14	16	★ **153276**	**QSLF-⅛-8-B**	**10**
G¼	4.3	6	12.5	11.8	31.3	25	9.5	21.8	17	17	22	★ **153275**	**QSLF-¼-6-B**	**10**
	6.7	8	14.5	13.8	32.3	25	9.5	23.7	18.1	17	24	★ **153277**	**QSLF-¼-8-B**	**10**
	8	10	17.5	16.8	34.3	25.5	9.5	26	20.2	17	27	★ **153279**	**QSLF-¼-10-B**	**10**
G⅜	6.7	8	14.5	13.8	34.8	27.5	11	24.7	18.1	21	33	★ **153278**	**QSLF-⅜-8-B**	**10**
	8.3	10	17.5	16.8	37.3	28.5	11	27	20.2	21	36	★ **153280**	**QSLF-⅜-10-B**	**10**

1) Packaging unit quantity

Festo core product range	★ Generally ready for shipping ex works in 24 hours ☆ Generally ready for shipping ex works in 5 days

Push-in fittings QS, standard series

Technical data

Push-in L-fitting QSLV-...-I
Orientable
Male thread with internal hex

R thread

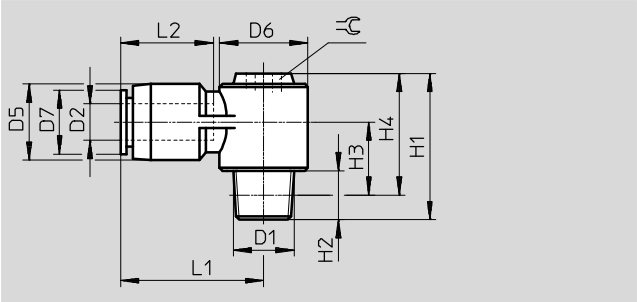

G thread

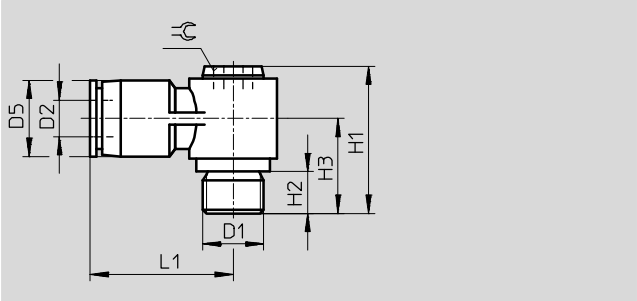

Dimensions and ordering data																
Connection D1	Nominal size [mm]	Tubing O.D. D2	D5 ∅	D6 ∅	D7 ∅	H1	H2	H3	H4	L1	L2	⌀	Weight/ piece [g]	Part No.	Type	PU[1]
R thread																
R⅛	3	6	13	14.3	11.8	24	8	11.5	20	23.7	17	5	15	**153097**	**QSLV-⅛-6-I**	**10**
	4.2	8	14	17.9	13.8	27	8	12	23	26.7	18.1	8	22	**153099**	**QSLV-⅛-8-I**	**10**
R¼	3.1	6	13	14.3	11.8	27	11	12.5	21	23.7	17	5	22	**153098**	**QSLV-¼-6-I**	**10**
	4	8	14	17.9	13.8	30	11	13	24	26.7	18.1	8	28	**153100**	**QSLV-¼-8-I**	**10**
	5.4	10	18	21.3	16.8	34	11	15	28	30.7	20.7	10	40	**153102**	**QSLV-¼-10-I**	**10**
R⅜	4.2	8	14	17.9	13.8	31	12	13.7	24.7	26.7	18.1	8	37	**153101**	**QSLV-⅜-8-I**	**10**
	5.4	10	18	21.3	16.8	35	12	15.7	28.7	30.7	20.7	10	49	**153103**	**QSLV-⅜-10-I**	**10**
	6.9	12	21	26.3	19.8	39	12	17.7	32.7	36.4	23.4	12	68	**153104**	**QSLV-⅜-12-I**	**10**
R½	6.4	12	21	26.3	19.8	42	15	18.8	33.8	36.4	23.4	12	85	**153105**	**QSLV-½-12-I**	**1**
G thread																
G⅛	3	6	13	–	–	23	5.1	14.5	–	23.7	–	5	15	**186148**	**QSLV-G⅛-6-I**	**10**
	4.2	8	14	–	–	26	5.1	15	–	26.7	–	8	22	**186150**	**QSLV-G⅛-8-I**	**10**
G¼	3.1	6	13	–	–	23.5	5.6	15	–	23.7	–	5	19	**186149**	**QSLV-G¼-6-I**	**10**
	4	8	14	–	–	26.5	5.6	15.5	–	26.7	–	8	25	**186151**	**QSLV-G¼-8-I**	**10**
	5.4	10	18	–	–	30.5	5.6	17.5	–	30.7	–	10	38	**186153**	**QSLV-G¼-10-I**	**10**
G⅜	4.2	8	14	–	–	28	6.6	17	–	26.7	–	8	33	**186152**	**QSLV-G⅜-8-I**	**10**
	5.4	10	18	–	–	32	6.6	19	–	30.7	–	10	45	**186154**	**QSLV-G⅜-10-I**	**10**
	6.9	12	21	–	–	36	6.6	21	–	36.4	–	12	65	**186155**	**QSLV-G⅜-12-I**	**10**
G½	6.4	12	21	–	–	37	7.6	22	–	36.4	–	12	75	**186156**	**QSLV-G½-12-I**	**1**

1) Packaging unit quantity

Push-in L-fitting QSLV
Orientable
Male thread with external hex

M thread

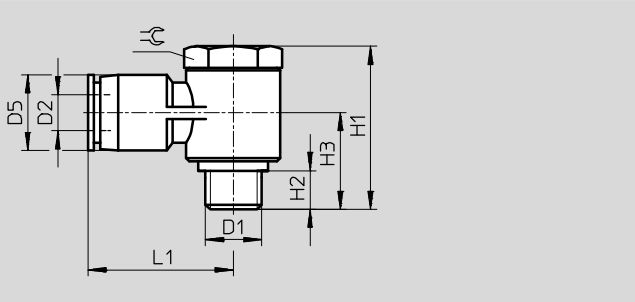

R thread

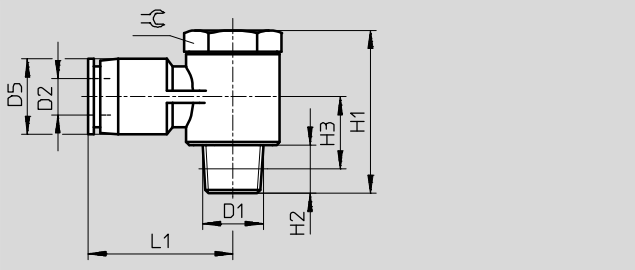

Dimensions and ordering data												
Connection D1	Nominal size [mm]	Tubing O.D. D2	D5 ∅	H1	H2	H3	L1	⇌	Weight/ piece [g]	Part No.	Type	PU[1]
Metric thread												
M5	1.6	6	12.5	17.7	3.5	10.9	23.1	8	8.2	★ **190666**	**QSLV-M5-6**	**10**
R thread												
R⅛	2.4	4	10	27	8	12	22.5	14	20	★ **153086**	**QSLV-⅛-4**	**10**
										130749	**QSLV-⅛-4-100**	**100**
	3.7	6	12.5	27	8	12	24	14	35.5	★ **153087**	**QSLV-⅛-6**	**10**
										130750	**QSLV-⅛-6-100**	**100**
	4.4	8	14.5	27	8	12	26	14	37	★ **153089**	**QSLV-⅛-8**	**10**
										130751	**QSLV-⅛-8-50**	**50**
R¼	3.8	6	12.5	31.5	11	13.5	27	17	32.5	★ **153088**	**QSLV-¼-6**	**10**
										130752	**QSLV-¼-6-100**	**100**
	5	8	14.5	31.5	11	13.5	28.5	17	59.5	★ **153090**	**QSLV-¼-8**	**10**
										130753	**QSLV-¼-8-50**	**50**
	5.4	10	17.5	31.5	11	14.5	30.5	17	62.5	★ **153092**	**QSLV-¼-10**	**10**
										130754	**QSLV-¼-10-50**	**50**
R⅜	5.2	8	14.5	36	12	15.5	30.5	21	54.5	★ **153091**	**QSLV-⅜-8**	**10**
	6.3	10	17.5	36	12	15.5	33	21	66	★ **153093**	**QSLV-⅜-10**	**10**
	7.1	12	21	36	12	17	35	21	97.5	★ **153094**	**QSLV-⅜-12**	**10**
R½	8	12	21	40.5	15	16.5	38	24	100	★ **153095**	**QSLV-½-12**	**1**
	8.9	16	25	48.5	15	22	36.5	24	115	**153096**	**QSLV-½-16**	**1**

1) Packaging unit quantity

Festo core product range
★ Generally ready for shipping ex works in 24 hours
☆ Generally ready for shipping ex works in 5 days

Push-in fittings QS, standard series

Technical data

Push-in L-fitting QSLV
Orientable
Male thread with external hex

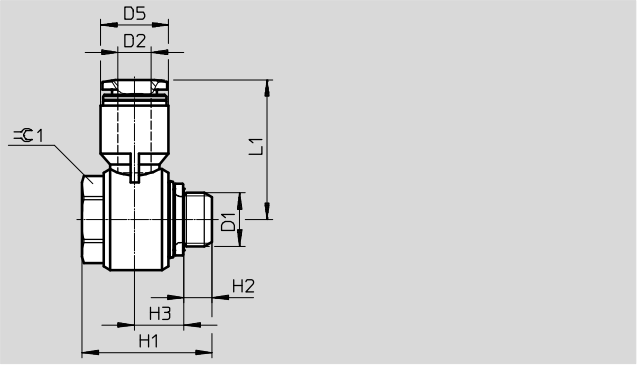

Dimensions and ordering data												
Connection D1	Nominal size [mm]	Tubing O.D. D2	D5 ∅	H1	H2	H3	L1	⬡ 1	Weight/ piece [g]	Part No.	Type	PU[1]
G thread												
G⅛	2.3	4	10	23.7	5.1	8.7	23.4	14	22	★ **186137**	**QSLV-G⅛-4**	**10**
										132060	**QSLV-G⅛-4-100**	**100**
	3.5	6	12.4	23.7	5.1	9	25.5	14	23	★ **186138**	**QSLV-G⅛-6**	**10**
										132061	**QSLV-G⅛-6-100**	**100**
	4	8	14.4	23.7	5.1	10	28.4	14	25	★ **186140**	**QSLV-G⅛-8**	**10**
										132062	**QSLV-G⅛-8-50**	**50**
G¼	3.7	6	14.5	28.6	5.6	10.4	29	19	44	★ **186139**	**QSLV-G¼-6**	**10**
										132063	**QSLV-G¼-6-100**	**100**
	4.9	8	14.5	28.6	5.6	10.4	28.9	19	45	★ **186141**	**QSLV-G¼-8**	**10**
										132064	**QSLV-G¼-8-50**	**50**
	5.3	10	17.6	28.6	5.6	11.7	31.2	19	48	★ **186143**	**QSLV-G¼-10**	**10**
										132065	**QSLV-G¼-10-50**	**50**
G⅜	5.4	8	14.4	33.1	6.6	12.6	31	24	71	★ **186142**	**QSLV-G⅜-8**	**10**
	6.4	10	17.6	33.1	6.6	12.6	33.6	24	74	★ **186144**	**QSLV-G⅜-10**	**10**
	6.4	12	21	33.1	6.6	14.3	36.4	24	77	★ **186145**	**QSLV-G⅜-12**	**10**
G½	7	12	21	34	7.6	14.3	37.9	27	99	★ **186146**	**QSLV-G½-12**	**1**
	8.1	16	25	43.1	7.6	17.2	38.1	27	115	**186147**	**QSLV-G½-16**	**1**

1) Packaging unit quantity

Festo core product range
★ Generally ready for shipping ex works in 24 hours
☆ Generally ready for shipping ex works in 5 days

Push-in L-connector QSL

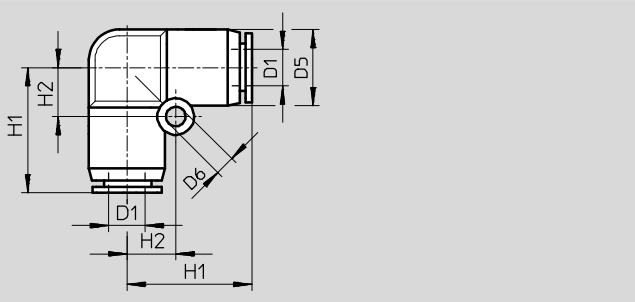

Dimensions and ordering data									
Tubing O.D. D1	Nominal size [mm]	D5 ∅	D6 ∅	H1	H2	Weight/ piece [g]	Part No.	Type	PU[1]
4	2.3	10	3.2	16.9	6.5	5.1	★ **153070**	**QSL-4**	**10**
							130740	**QSL-4-100**	**100**
6	3.6	12.5	3.2	20.1	8	7.3	★ **153071**	**QSL-6**	**10**
							130741	**QSL-6-100**	**100**
8	4.6	15	4.2	22.4	10	11	★ **153072**	**QSL-8**	**10**
							130742	**QSL-8-50**	**50**
10	6.2	17.5	4.2	26.2	12	17	★ **153073**	**QSL-10**	**10**
							130743	**QSL-10-50**	**50**
12	7.7	21	4.2	29.4	14	25	★ **153074**	**QSL-12**	**10**
							130744	**QSL-12-20**	**20**
16	10.8	25	4.2	33.1	12	31	**153075**	**QSL-16**	**1**
							133194	**QSL-16-20**	**20**

1) Packaging unit quantity

Festo core product range	★ Generally ready for shipping ex works in 24 hours ☆ Generally ready for shipping ex works in 5 days

Push-in L-connector QSL-...H
with push-in sleeve

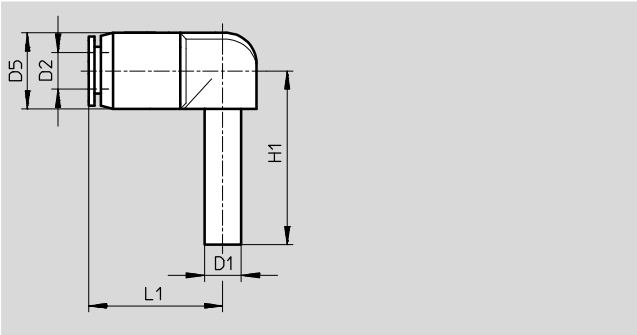

Long push-in sleeve

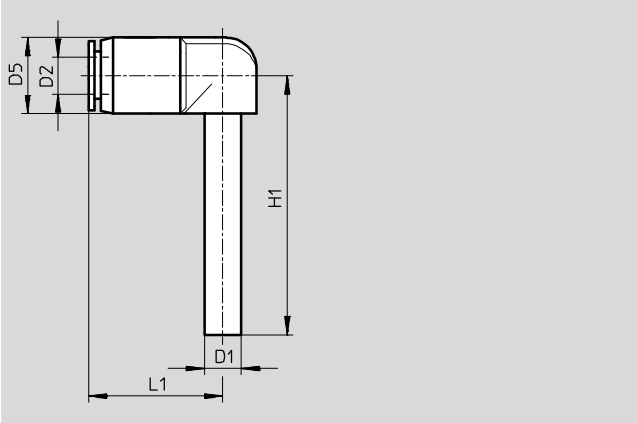

Dimensions and ordering data									
Push-in sleeve ∅ D1	Nominal size [mm]	Tubing O.D. D2	D5 ∅	H1	L1	Weight/ piece [g]	Part No.	Type	PU[1]
4	2	4	10	25	16.8	2.7	★ **153056**	**QSL-4H**	**10**
							130745	**QSL-4H-100**	**100**
6	3.2	6	12.5	28.5	19.8	3.9	★ **153057**	**QSL-6H**	**10**
							130746	**QSL-6H-100**	**100**
8	4.7	8	14.5	30.7	21.8	5.7	★ **153058**	**QSL-8H**	**10**
							130747	**QSL-8H-50**	**50**
10	5.7	10	17.5	33.7	24.9	9.6	★ **153059**	**QSL-10H**	**10**
							130748	**QSL-10H-50**	**50**
12	6.8	12	21	39	28.9	15	★ **153060**	**QSL-12H**	**10**
Reducing									
6	2.4	4	12.5	28.5	17.7	3.6	★ **153061**	**QSL-6H-4**	**10**
8	3.5	6	14.5	30.7	21.9	5.2	★ **153062**	**QSL-8H-6**	**10**
10	4.9	8	17.5	33.7	24.6	8	★ **153063**	**QSL-10H-8**	**10**
12	6.1	10	21	39	28.7	14	★ **153064**	**QSL-12H-10**	**10**
Long push-in sleeve									
4	2	4	10	36	16.8	2.8	★ **153065**	**QSL-4HL**	**10**
6	3.1	6	12.5	42	19.8	4.2	★ **153066**	**QSL-6HL**	**10**
8	4.5	8	14.5	46.7	21.8	6.2	★ **153067**	**QSL-8HL**	**10**
10	5.6	10	17.5	51.7	24.9	11	★ **153068**	**QSL-10HL**	**10**
12	6.7	12	21	59.5	28.95	16	★ **153069**	**QSL-12HL**	**10**

1) Packaging unit quantity

Festo core product range	★ Generally ready for shipping ex works in 24 hours ☆ Generally ready for shipping ex works in 5 days

Push-in T-fitting QST
Orientable
Male thread with external hex

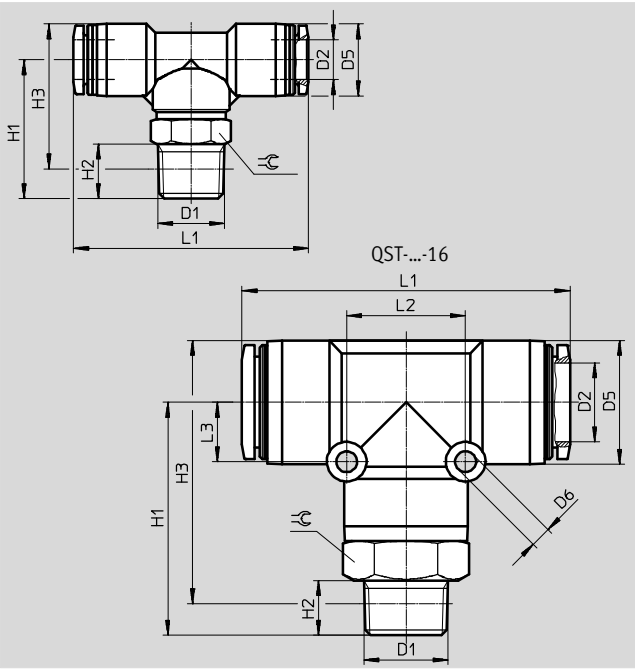

Dimensions and ordering data															
Connection D1	Nominal size [mm]	Tubing O.D. D2	D5 ∅	D6 ∅	H1	H2	H3	L1	L2	L3	⌀	Weight/ piece [g]	Part No.	Type	PU[1]
R thread															
R⅛	2.8	4	10	–	22	8	23	37.4	–	–	10	13	★ 153106	QST-⅛-4	10
													130793	QST-⅛-4-100	100
	4.2	6	12.5	–	22.5	8	24.8	40.5	–	–	10	14	★ 153107	QST-⅛-6	10
													130794	QST-⅛-6-100	100
	6	8	14.5	–	24	8	27.3	45.4	–	–	12	19	★ 153109	QST-⅛-8	10
													130795	QST-⅛-8-50	50
	6	10	17.5	–	25	8	29.8	51	–	–	12	25	★ 190667	QST-⅛-10	10
R¼	2.8	4	10	–	29	11	28	41.4	–	–	14	20	★ 190668	QST-¼-4	10
	4.3	6	12.5	–	28	11	28.2	43.5	–	–	14	22	★ 153108	QST-¼-6	10
													130796	QST-¼-6-100	100
	6.7	8	14.5	–	28	11	29.2	47.4	–	–	14	25	★ 153110	QST-¼-8	10
													130797	QST-¼-8-50	50
	8	10	17.5	–	28.5	11	31.2	52	–	–	14	31	★ 153112	QST-¼-10	10
													130798	QST-¼-10-50	50
	8	12	21	–	29.8	11	34.2	57.9	–	–	14	38	★ 190669	QST-¼-12	10
R⅜	4.3	6	12.5	–	31.5	12	31.4	47.5	–	–	17	33	★ 190670	QST-⅜-6	10
	6.7	8	14.5	–	31	12	31.9	49.4	–	–	17	35	★ 153111	QST-⅜-8	10
													130799	QST-⅜-8-50	50
	8.3	10	17.5	–	32	12	34.4	54	–	–	17	42	★ 153113	QST-⅜-10	10
													130800	QST-⅜-10-20	20
	10	12	21	–	32.5	12	36.7	59.4	–	–	17	48	★ 153114	QST-⅜-12	10
													130801	QST-⅜-12-20	20
	11	16	25	4.2	47	11	53.2	66.2	24	12	22	89	164959	QST-⅜-16	1
R½	8.3	10	17.5	–	36	15	36.6	55	–	–	21	65	★ 190672	QST-½-10	1
	10.3	12	21	–	36.5	15	38.8	61.4	–	–	21	72	★ 153115	QST-½-12	1
	13	16	25	4.2	51	15	55.3	66.2	24	12	22	93	153116	QST-½-16	1

1) Packaging unit quantity

Festo core product range	★ Generally ready for shipping ex works in 24 hours ☆ Generally ready for shipping ex works in 5 days

Push-in T-fitting QST
Orientable
Male thread with external hex

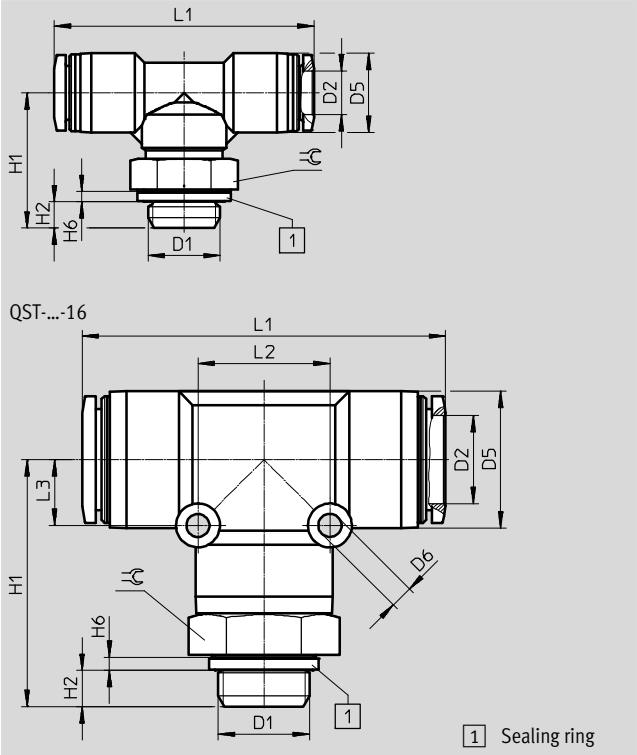

Dimensions and ordering data															
Connection D1	Nominal size [mm]	Tubing O.D. D2	D5 ∅	D6 ∅	H1	H2	H6	L1	L2	L3	⬡	Weight/ piece [g]	Part No.	Type	PU[1]
G thread with sealing ring															
G⅛	2.8	4	10	–	21.1	4.2	1.9	37.4	–	–	13	15	**186157**	**QST-G⅛-4**	**10**
													132066	**QST-G⅛-4-100**	**100**
	4.2	6	12.5	–	21.6	4.2	1.9	40.5	–	–	13	17	**186158**	**QST-G⅛-6**	**10**
													132067	**QST-G⅛-6-100**	**100**
	6	8	14.5	–	22.1	4.2	1.9	45.4	–	–	13	19	**186160**	**QST-G⅛-8**	**10**
													132068	**QST-G⅛-8-50**	**50**
G¼	4.3	6	12.5	–	24.7	4.8	1.9	43.5	–	–	17	24	**186159**	**QST-G¼-6**	**10**
													132069	**QST-G¼-6-100**	**100**
	6.7	8	14.5	–	24.7	4.8	1.9	47.4	–	–	17	27	**186161**	**QST-G¼-8**	**10**
													132070	**QST-G¼-8-50**	**50**
	8	10	17.5	–	25.2	4.8	1.9	52	–	–	17	33	**186163**	**QST-G¼-10**	**10**
													132071	**QST-G¼-10-50**	**50**
	8	12	21	–	26.5	4.8	1.9	57.9	–	–	17	43	**132597**	**QST-G¼-12**	**1**
G⅜	6.7	8	14.5	–	27.2	5.8	2.4	49.4	–	–	19	34	**186162**	**QST-G⅜-8**	**10**
													132072	**QST-G⅜-8-50**	**50**
	8.3	10	17.5	–	28.2	5.8	2.4	54	–	–	19	41	**186164**	**QST-G⅜-10**	**10**
													132073	**QST-G⅜-10-20**	**20**
	10	12	21	–	28.7	5.8	2.4	59.4	–	–	19	47	**186165**	**QST-G⅜-12**	**10**
													132074	**QST-G⅜-12-20**	**20**
	11	16	25	4.2	44.2	5.8	2.4	66.2	24	12	24	97	**186349**	**QST-G⅜-16**	**1**
G½	10.3	12	21	–	32.2	6.8	2.4	61.4	–	–	24	78	**186166**	**QST-G½-12**	**1**
	13	16	25	4.2	45.2	6.8	2.4	66.2	24	12	24	95	**186167**	**QST-G½-16**	**1**

1) Packaging unit quantity

Push-in T-connector QST

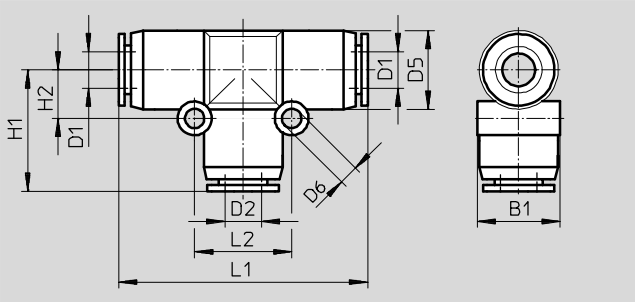

Dimensions and ordering data													
Tubing O.D. D1	Nominal size [mm]	Tubing O.D. D2	D5 ∅	D6 ∅	B1	H1	H2	L1	L2	Weight/ piece [g]	Part No.	Type	PU[1]
4	2.6	4	10	3.2	10.4	17.2	6.5	34.4	13	7.5	★ **153128**	**QST-4**	**10**
											130802	**QST-4-100**	**100**
6	4	6	13	3.2	13.5	20.1	8	40.2	16	11	★ **153129**	**QST-6**	**10**
											130803	**QST-6-100**	**100**
8	5	8	15	3.2	15.6	22.2	9	44.4	18	16	★ **153130**	**QST-8**	**10**
											130804	**QST-8-50**	**50**
10	6.7	10	17.5	4.2	18.2	25.2	12	50.4	24	25	★ **153131**	**QST-10**	**10**
											130805	**QST-10-50**	**50**
12	8.7	12	21	4.2	21.7	28.4	14	56.8	28	36	★ **153132**	**QST-12**	**10**
											130806	**QST-12-20**	**20**
16	10.7	16	25	4.2	25.6	33.1	12	66.2	24	44	**153133**	**QST-16**	**1**
Reducing													
6	2.3	4	13	3.2	13	19.5	8	40.1	16	11	★ **153134**	**QST-6-4**	**10**
											130820	**QST-6-4-100**	**100**
8	2.3	4	14.5	3.2	15,1	21.7	9	44.4	18	14	★ **130613**	**QST-8-4**	**10**
	3.5	6	14.5	3.2	15,1	22.3	9	44.4	18	14	★ **153135**	**QST-8-6**	**10**
											130821	**QST-8-6-50**	**50**
10	3.7	6	17.5	4.2	18,2	25	12	50.4	24	22	★ **130614**	**QST-10-6**	**10**
	4.9	8	17.5	4.2	18,2	24.9	12	50.4	24	23	★ **153136**	**QST-10-8**	**10**
											130822	**QST-10-8-50**	**50**
12	5.1	8	21	4.2	21,7	27.7	14	56.8	28	32	★ **130615**	**QST-12-8**	**10**
	6.1	10	21	4.2	21,7	28	14	56.8	28	34	★ **153137**	**QST-12-10**	**10**
											130823	**QST-12-10-20**	**20**
16	7.6	12	25	4.2	25,7	33.2	12	66.2	24	45	★ **130616**	**QST-16-12**	**1**

1) Packaging unit quantity

Festo core product range	★ Generally ready for shipping ex works in 24 hours ☆ Generally ready for shipping ex works in 5 days

Push-in T-fitting QSTF
Orientable
Male and female thread with external hex

R thread

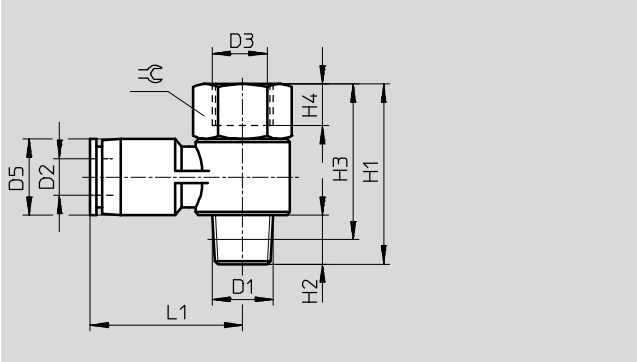

G thread

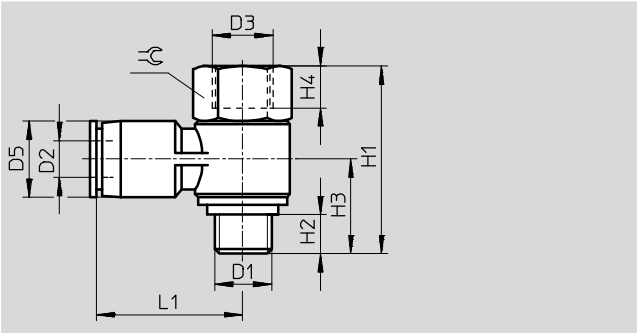

Dimensions and ordering data														
Connection D1	Nominal size [mm]	Tubing O.D. D2	D3 ∅	D5 ∅	H1	H2	H3	H4	L1	⬡	Weight/ piece [g]	Part No.	Type	PU[1]
R thread														
R⅛	2.5	4	G⅛	10	32.5	8	28.5	7	22.2	14	22	**153182**	**QSTF-⅛-4-B**	**1**
	3.3	6	G⅛	12.5	32.5	8	28.5	7	24.2	14	23	**153183**	**QSTF-⅛-6-B**	**1**
	3.6	8	G⅛	14.5	32.5	8	28.5	7	26.2	14	25	**153185**	**QSTF-⅛-8-B**	**1**
R¼	3.6	6	G¼	12.5	38.5	11	32.5	9	26.8	17	37	**153184**	**QSTF-¼-6-B**	**1**
	4.4	8	G¼	14.5	38.5	11	32.5	9	28.2	17	39	**153186**	**QSTF-¼-8-B**	**1**
	4.4	10	G¼	18	38.5	11	32.5	9	30.5	17	42	**153188**	**QSTF-¼-10-B**	**1**
R⅜	4.9	8	G⅜	14.5	44.5	12	38.2	11	30.2	21	61	**153187**	**QSTF-⅜-8-B**	**1**
	5.6	10	G⅜	18	44.5	12	38.2	11	32.5	21	64	**153189**	**QSTF-⅜-10-B**	**1**
	6	12	G⅜	21	44.5	12	38.2	11	35.2	21	67	**153190**	**QSTF-⅜-12-B**	**1**
R½	7.4	12	G½	21	52.2	13	44	14	38.2	24	101	**153191**	**QSTF-½-12-B**	**1**
G thread with sealing ring														
G⅛	2.4	4	G⅛	10	26	5.1	13.8	7	23.4	14	20	**186199**	**QSTF-G⅛-4**	**1**
	3.2	6	G⅛	12.4	26	5.1	14.1	7	25.5	14	21	**186200**	**QSTF-G⅛-6**	**1**
	3.7	8	G⅛	14.4	26	5.1	15.1	7	28.4	14	23	**186202**	**QSTF-G⅛-8**	**1**
G¼	3.7	6	G¼	14.5	33.2	5.6	16	9	29	19	43	**186201**	**QSTF-G¼-6**	**1**
	4.4	8	G¼	14.5	33.2	5.6	16	9	28.9	19	44	**186203**	**QSTF-G¼-8**	**1**
	4.9	10	G¼	17.6	33.2	5.6	17.3	9	31.2	19	47	**186205**	**QSTF-G¼-10**	**1**
G⅜	4.9	8	G⅜	14.4	38.1	6.6	19.2	10.5	31	24	71	**186204**	**QSTF-G⅜-8**	**1**
	5.8	10	G⅜	17.6	38.1	6.6	19.2	10.5	33.6	24	74	**186206**	**QSTF-G⅜-10**	**1**
	6	12	G⅜	21	38.1	6.6	20.9	10.5	36.4	24	77	**186207**	**QSTF-G⅜-12**	**1**
G½	7	12	G½	21	42.8	7.6	21.9	13	37.9	27	99	**186208**	**QSTF-G½-12**	**1**

1) Packaging unit quantity

Push-in T-fitting QSTL
Orientable
Male thread with external hex

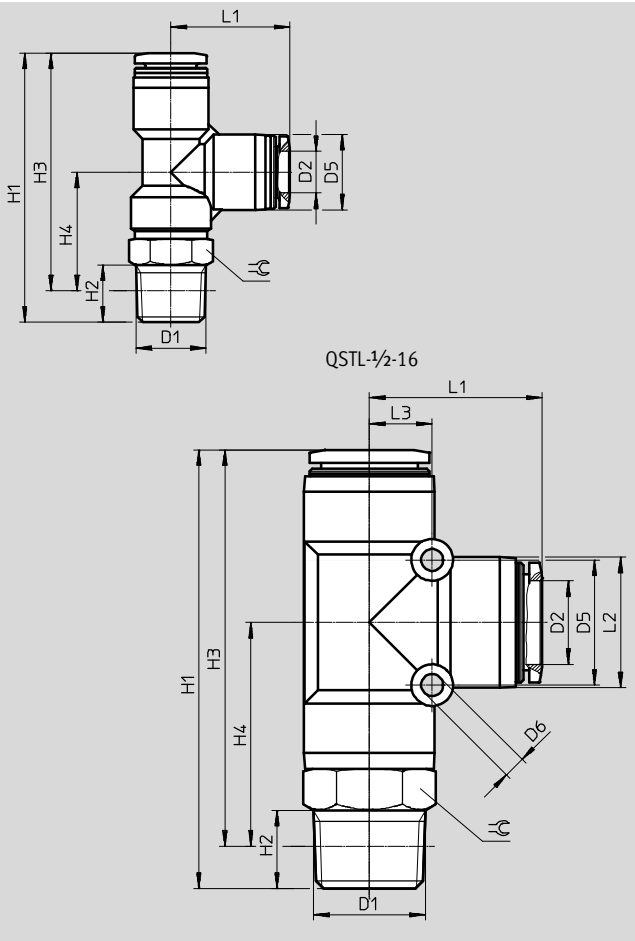

Dimensions and ordering data																
Connection D1	Nominal size [mm]	Tubing O.D. D2	D5 ∅	D6 ∅	H1	H2	H3	H4	L1	L2	L3	⬡	Weight/ piece [g]	Part No.	Type	PU[1]
R thread																
R⅛	2.8	4	10	–	40.2	8	36.2	19	17.2	–	–	10	13	★ 153117	QSTL-⅛-4	10
														130824	QSTL-⅛-4-100	100
	4.3	6	12.5	–	43.3	8	39.3	18.8	20.5	–	–	10	14	★ 153118	QSTL-⅛-6	10
														130825	QSTL-⅛-6-100	100
	6	8	14.5	–	46.9	8	42.9	20	22.9	–	–	12	19	★ 153120	QSTL-⅛-8	10
														130826	QSTL-⅛-8-50	50
R¼	4.3	6	12.5	–	48.8	11	42.7	22.2	20.5	–	–	14	22	★ 153119	QSTL-¼-6	10
														130827	QSTL-¼-6-100	100
	6.7	8	14.5	–	51.7	11	45.7	22.8	22.9	–	–	14	25	★ 153121	QSTL-¼-8	10
														130828	QSTL-¼-8-50	50
	8	10	17.5	–	54.7	11	48.7	22.5	26.2	–	–	14	31	★ 153123	QSTL-¼-10	10
														130829	QSTL-¼-10-50	50
R⅜	6.7	8	14.5	–	55.4	12	49.1	26.2	22.9	–	–	17	35	★ 153122	QSTL-⅜-8	10
	8.3	10	17.5	–	58.2	12	51.9	25.7	26.2	–	–	17	42	★ 153124	QSTL-⅜-10	10
	10	12	21	–	63.5	12	57.2	26.7	30.5	–	–	17	48	★ 153125	QSTL-⅜-12	10
R½	10.3	12	21	–	67.5	15	59.3	28.8	30.7	–	–	21	72	★ 153126	QSTL-½-12	1
	13	16	25	4.2	84.1	15	75.9	42.8	33.1	24	12	22	93	153127	QSTL-½-16	1

1) Packaging unit quantity

Festo core product range	★ Generally ready for shipping ex works in 24 hours ☆ Generally ready for shipping ex works in 5 days

Push-in T-fitting QSTL
Orientable
Male thread with external hex

G thread

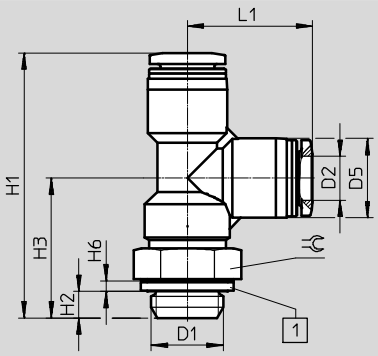

QSTL-G½-16

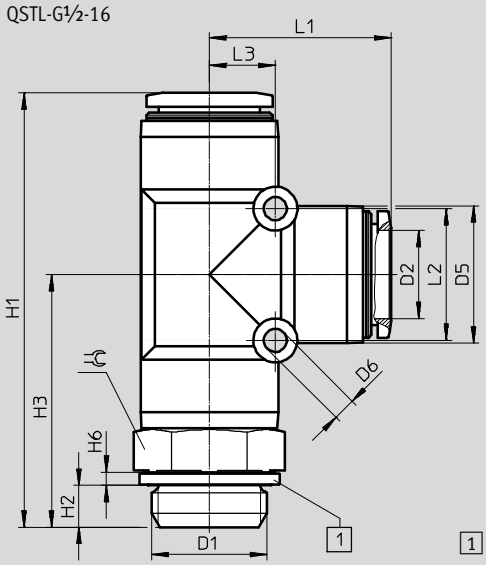

1 Sealing ring

Dimensions and ordering data

Connection D1	Nominal size [mm]	Tubing O.D. D2	D5 ∅	D6 ∅	H1	H2	H3	H6	L1	L2	L3	⌀	Weight/ piece [g]	Part No.	Type	PU[1]
G thread with sealing ring																
G⅛	2.8	4	10	–	39.3	4.2	22.1	1.9	17.2	–	–	13	15	**186168**	**QSTL-G⅛-4**	**10**
														132075	**QSTL-G⅛-4-100**	**100**
	4.3	6	12.5	–	42.4	4.2	21.9	1.9	20.5	–	–	13	17	**186169**	**QSTL-G⅛-6**	**10**
														132076	**QSTL-G⅛-6-100**	**100**
	6	8	14.5	–	45	4.2	22.1	1.9	22.9	–	–	13	19	**186171**	**QSTL-G⅛-8**	**10**
														132077	**QSTL-G⅛-8-50**	**50**
G¼	4.3	6	12.5	–	45.5	4.8	25	1.9	20.5	–	–	17	24	**186170**	**QSTl-G¼-6**	**10**
														132078	**QSTl-G¼-6-100**	**100**
	6.7	8	14.5	–	48.4	4.8	25.5	1.9	22.9	–	–	17	27	**186172**	**QSTL-G¼-8**	**10**
														132079	**QSTL-G¼-8-50**	**50**
	8	10	17.5	–	51.4	4.8	25.2	1.9	26.2	–	–	17	33	**186174**	**QSTL-G¼-10**	**10**
														132080	**QSTL-G¼-10-50**	**50**
G⅜	6.7	8	14.5	–	51.6	5.8	28.7	2.4	22.9	–	–	19	34	**186173**	**QSTL-G⅜-8**	**10**
	8.3	10	17.5	–	54.4	5.8	28.2	2.4	26.2	–	–	19	41	**186175**	**QSTL-G⅜-10**	**10**
	10	12	21	–	59.7	5.8	29.2	2.4	30.5	–	–	19	48	**186176**	**QSTL-G⅜-12**	**10**
G½	10.3	12	21	–	63.2	6.8	32.7	2.4	30.7	–	–	24	78	**186177**	**QSTL-G½-12**	**1**
	13	16	25	4.2	78.3	6.8	45.2	2.4	33.1	24	12	24	89	**186178**	**QSTL-G½-16**	**1**

1) Packaging unit quantity

Push-in angled fitting QSW
Orientable
Male thread with external hex

R thread

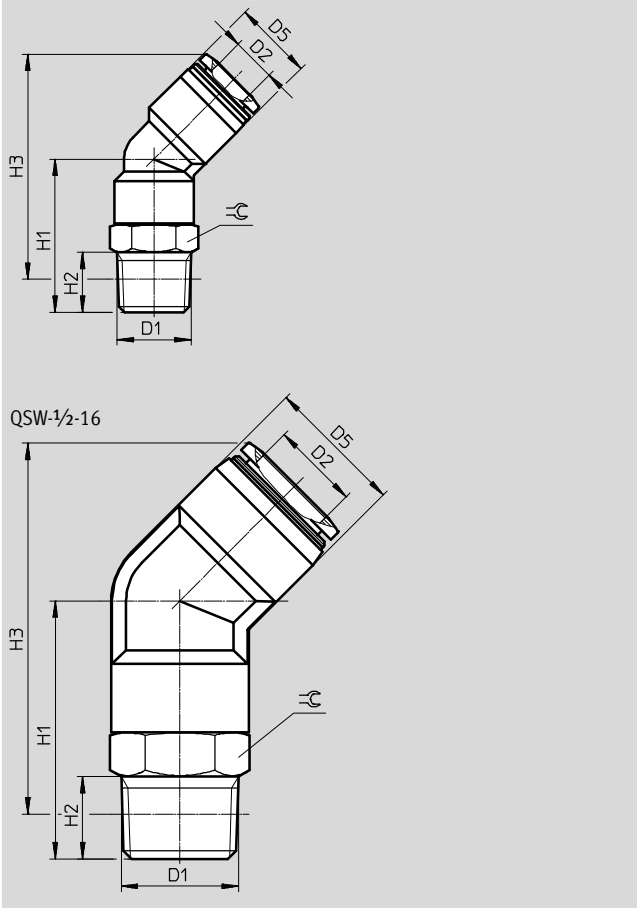

Dimensions and ordering data											
Connection D1	Nominal size mm]	Tubing O.D. D2	D5	H1	H2	H3	⇌	Weight/ piece [g]	Part No.	Type	PU[1]
R thread											
R⅛	2.5	4	8	14.8	8	23	10	6.1	**130596**	**QSW-⅛-4**	**10**
	3.3	6	10.5	16.4	8	25.3	10	6.8	**130597**	**QSW-⅛-6**	**10**
	6	8	14.5	24	8	39.2	12	14	**130598**	**QSW-⅛-8**	**10**
R¼	3.3	6	10.5	21.4	11	28.2	14	17.9	**130599**	**QSW-¼-6**	**10**
	6.7	8	14.5	28	11	41.2	14	20	**130600**	**QSW-¼-8**	**10**
	8	10	17.5	28.5	11	44.9	14	23	**130601**	**QSW-¼-10**	**10**
R⅜	8.3	10	17.5	33	12	49.1	17	35	**130602**	**QSW-⅜-10**	**10**
	9.5	12	21	32.5	12	53.2	17	38	**130603**	**QSW-⅜-12**	**10**
R½	10.3	12	21	36.5	15	55.4	21	61	**130604**	**QSW-½-12**	**1**
	13	16	25	47	15	67.6	22	78	**130605**	**QSW-½-16**	**1**

1) Packaging unit quantity

Push-in angled connector QSW-...HL
with push-in sleeve

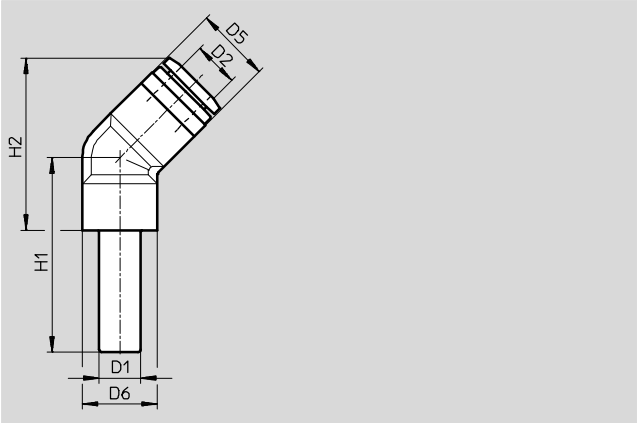

Dimensions and ordering data										
Push-in sleeve ∅ D1	Nominal size mm]	Tubing O.D. D2	D5	D6	H1	H2	Weight/ piece [g]	Part No.	Type	PU[1)]
4	2	4	8	8	21.8	15	1.4	**130617**	**QSW-4HL**	**10**
6	2.7	6	10.5	8	24.6	17.3	2.1	**130618**	**QSW-6HL**	**10**
8	5	8	14.5	10	28.5	25.7	5.8	**130619**	**QSW-8HL**	**10**
10	6,3	10	17.5	11	31.5	30.5	9.5	**130620**	**QSW-10HL**	**10**
12	7,9	12	21	14	35.5	36.3	14.5	**130621**	**QSW-12HL**	**10**

1) Packaging unit quantity

Push-in X-connector QSX

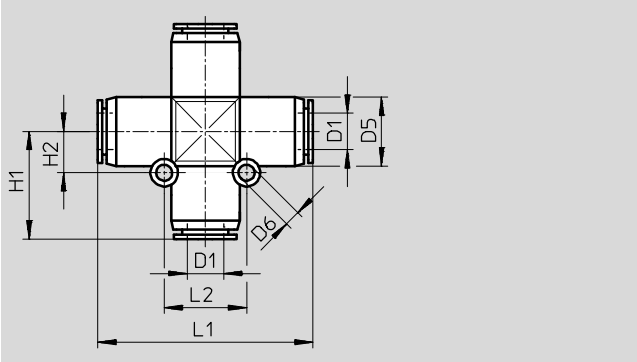

Dimensions and ordering data										
Tubing O.D. D1	Nominal size [mm]	D5 ∅	D6 ∅	H1	H2	L1	L2	Weight/ piece [g]	Part No.	Type	PU[1)]
8	4.7	15	3.5	23.5	9	47	18	20	**153285**	**QSX-8**	**10**
10	6.1	17.5	4.5	27.5	11	55	22	32	**153286**	**QSX-10**	**10**
12	7.5	21	4.5	31	12	62	24	46	**153287**	**QSX-12**	**10**

1) Packaging unit quantity

Push-in fittings QS, standard series

Technical data

Push-in Y-fitting QSY
Orientable
Male thread with external hex

M thread

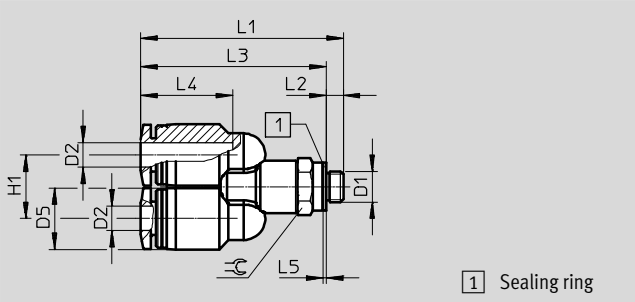

R thread

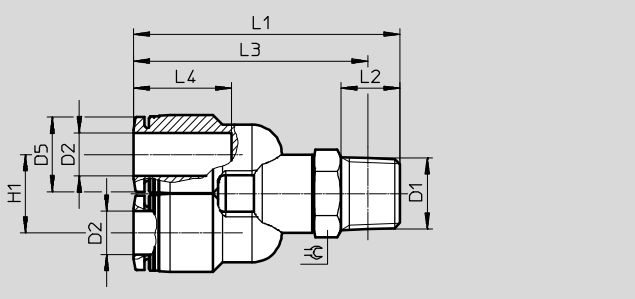

Dimensions and ordering data														
Connection D1	Nominal size [mm]	Tubing O.D. D2	D5 ∅	H1	L1	L2	L3	L4	L5	⬡	Weight/ piece [g]	Part No.	Type	PU[1]
Metric thread with sealing ring														
M5	2.4	4	10	10.3	32.9	2.8	30.1	14.9	0.5	8	8	★ **190673**	**QSY-M5-4**	**10**
	2.4	6	12.5	12.5	38.3	2.8	35.5	17	0.5	10	13	★ **190674**	**QSY-M5-6**	**10**
R thread														
R⅛	3.1	4	10	10.3	38.4	8	34.4	14.9	–	10	13	★ **153138**	**QSY-⅛-4**	**10**
	4.2	6	12.5	12.5	41.3	8	37.3	17	–	10	15	★ **153139**	**QSY-⅛-6**	**10**
	5.9	8	14.5	14.5	46.1	8	42.1	18.1	–	12	20	★ **153141**	**QSY-⅛-8**	**10**
R¼	3.3	4	10	10.3	43.4	11	37.4	14.9	–	14	20	★ **190675**	**QSY-¼-4**	**10**
	4.8	6	12.5	12.5	48.3	11	42.2	17	–	14	22	★ **153140**	**QSY-¼-6**	**10**
	6.2	8	14.5	14.5	49.3	11	43.3	18.1	–	14	25	★ **153142**	**QSY-¼-8**	**10**
	7.2	10	17.5	17.5	53.6	11	47.6	20.2	–	14	32	★ **153144**	**QSY-¼-10**	**10**
R⅜	6.6	8	14.5	14.5	52.5	12	46.2	18.1	–	17	36	★ **153143**	**QSY-⅜-8**	**10**
	7.4	10	17.5	17.5	56.7	12	50.4	20.2	–	17	43	★ **153145**	**QSY-⅜-10**	**10**
	8.4	12	21	21	60.6	12	54.3	23.4	–	17	51	★ **153146**	**QSY-⅜-12**	**10**
R½	7.8	10	17.5	17.5	60.2	15	52	20.2	–	21	66	**133196**	**QSY-½-10**	**1**
	8.3	12	21	21	64.7	15	56.5	23.4	–	21	74	★ **153147**	**QSY-½-12**	**1**

1) Packaging unit quantity

Festo core product range
★ Generally ready for shipping ex works in 24 hours
☆ Generally ready for shipping ex works in 5 days

Push-in fittings QS, standard series

Technical data

Push-in Y-fitting QSY
Orientable
Male thread with external hex

G thread

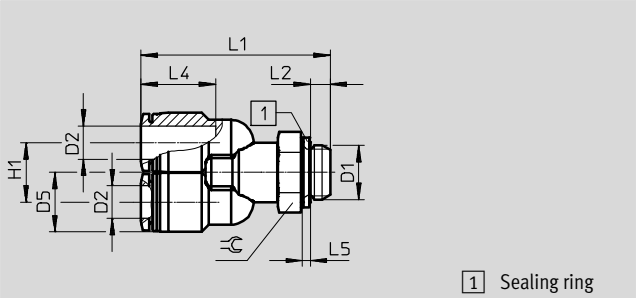

1 Sealing ring

Dimensions and ordering data													
Connection D1	Nominal size [mm]	Tubing O.D. D2	D5 ∅	H1	L1	L2	L4	L5	⬡	Weight/ piece [g]	Part No.	Type	PU[1]
G thread with sealing ring													
G⅛	3.1	4	10	10.3	37.5	4.2	14.9	1.9	13	15	**186179**	**QSY-G⅛-4**	**10**
	4.2	6	12.5	12.5	40.4	4.2	17	1.9	13	17	**186180**	**QSY-G⅛-6**	**10**
	5.9	8	14.5	14.5	44.2	4.2	18.1	1.9	13	20	**186182**	**QSY-G⅛-8**	**10**
G¼	4.8	6	12.5	12.5	45	4.8	17	1.9	17	25	**186181**	**QSY-G¼-6**	**10**
	6.2	8	14.5	14.5	46	4.8	18.1	1.9	17	28	**186183**	**QSY-G¼-8**	**10**
	7.2	10	17.5	17.5	50.3	4.8	20.2	1.9	17	35	**186185**	**QSY-G¼-10**	**10**
G⅜	6.6	8	14.5	14.5	48.7	5.8	18.1	2.4	19	35	**186184**	**QSY-G⅜-8**	**10**
	7.4	10	17.5	17.5	52.9	5.8	20.2	2.4	19	42	**186186**	**QSY-G⅜-10**	**10**
	8.4	12	21	21	56.8	5.8	23.4	2.4	19	50	**186187**	**QSY-G⅜-12**	**10**
G½	8.3	12	21	21	60.4	6.8	23.4	2.4	24	80	**186188**	**QSY-G½-12**	**1**

1) Packaging unit quantity

Push-in Y-connector QSY

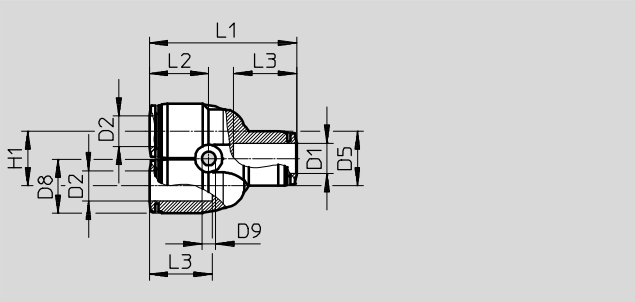

2 reducing outlets

Reducing

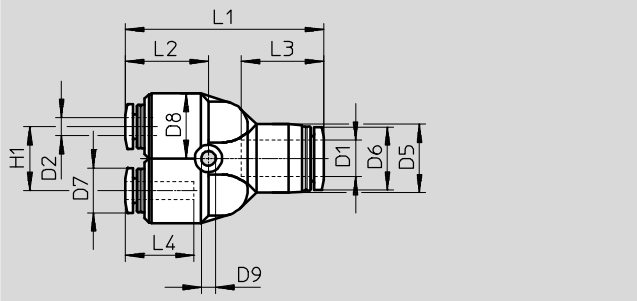

Dimensions and ordering data																
Tubing O.D. D1	Nominal size [mm]	Tubing O.D. D2	D5 ∅	D6 ∅	D7 ∅	D8 ∅	D9 ∅	H1	L1	L2	L3	L4	Weight/ piece [g]	Part No.	Type	PU[1]
4	2.3	4	10	–	–	10	3.2	11	32.8	14.1	14.9	–	7.6	★ 153148	QSY-4	10
														130807	QSY-4-100	100
6	3.6	6	13	–	–	12.5	3.4	12	37.7	15.8	17	–	11	★ 153149	QSY-6	10
														130808	QSY-6-100	100
8	4.6	8	15	–	–	14.5	3.4	14	42.4	17.2	18.1	–	16	★ 153150	QSY-8	10
														130809	QSY-8-50	50
10	5.9	10	17.5	–	–	17.5	4.2	18	48.4	19.5	20.7	–	26	★ 153151	QSY-10	10
														130810	QSY-10-20	20
12	7	12	21	–	–	21	4.2	20	54.9	22.3	23.4	–	37	★ 153152	QSY-12	10
														130811	QSY-12-20	20
16	8.5	16	25	–	–	25	4.5	24	62.2	22.1	24.1	–	45	130609	QSY-16	1
Reducing																
6	2.3	4	13	11.8	9.9	12.5	3.4	12	37.2	15.2	17	14.9	11	★ 153153	QSY-6-4	10
														130812	QSY-6-4-100	100
8	1.7	4	14.5	13.8	9.9	12.5	3.4	14	41.9	16.7	18.1	14.9	13	★ 130610	QSY-8-4	10
	3.2	6	14.5	13.8	11.8	12.5	3.4	14	42.5	17.3	18.1	17	13	★ 153154	QSY-8-6	10
														130813	QSY-8-6-50	50
10	3.3	6	17.5	16.8	11.8	14.5	4.5	18	48.2	19.3	20.2	17	19	★ 130611	QSY-10-6	10
	4.5	8	17.5	16.8	13.8	14.5	4.5	18	48.1	19.2	20.2	18.1	20	★ 153155	QSY-10-8	10
														130814	QSY-10-8-20	20
12	4.5	8	21	19.8	13.8	17.5	4.5	20	54.3	21.7	23.4	18.1	27	★ 130612	QSY-12-8	10
	5.8	10	21	19.8	16.8	17.5	4.5	20	54.6	22	23.4	20.2	30	★ 153156	QSY-12-10	10
														130815	QSY-12-10-20	20
16	7	12	25	23	19.8	25	4.5	24	62.3	22.2	24.1	23.4	48	★ 190708	QSY-16-12	1

1) Packaging unit quantity

Festo core product range	★ Generally ready for shipping ex works in 24 hours ☆ Generally ready for shipping ex works in 5 days

Push-in Y-connector QSY-...H
with push-in sleeve

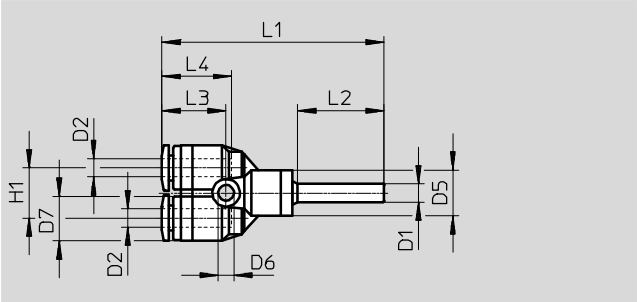

Dimensions and ordering data														
Push-in sleeve ∅ D1	Nominal size [mm]	Tubing O.D. D2	D5 ∅	D6 ∅	D7 ∅	H1	L1	L2	L3	L4	Weight/ piece [g]	Part No.	Type	PU[1]
4	1.6	4	10	3.2	10	11	48.7	19	14.1	14.9	6.5	**130628**	**QSY-4H**	**10**
Reducing														
6	2.3	4	10	3.2	10	11	50.9	22	14.1	14.9	6.8	**130633**	**QSY-6H-4**	**10**

1) Packaging unit quantity

Push-in Y-connector QSY-...H-B
with push-in sleeve

No. of supply lines: 1
No. of outlets: 2

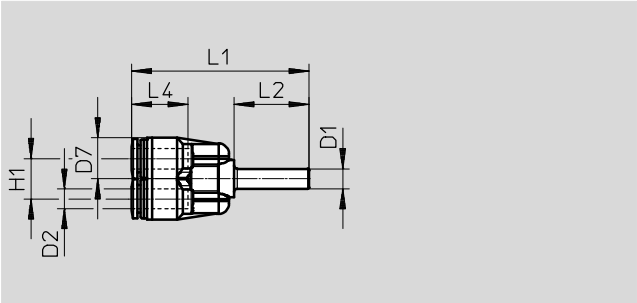

Dimensions and ordering data											
Push-in sleeve ∅ D1	Nominal size [mm]	For tubing O.D. D2	D7 ∅	H1	L1	L2	L4	Weight/ piece [g]	Part No.	Type	PU[1]
6	3.1	6	12.5	12	53.2	22.5	17	8.5	**133145**	**QSY-6H-B**	**10**
8	4.6	8	14.5	14	56.1	23.5	18.1	13	**133146**	**QSY-8H-B**	**10**
10	5.9	10	17.5	18	63.2	25	20.2	21	**133148**	**QSY-10H-B**	**10**
12	7.3	12	21	20	71.3	29	23.4	31	**133150**	**QSY-12H-B**	**10**
Reducing											
8	3.6	6	12.5	12	54.2	23.5	17	8.8	**133147**	**QSY-8H-6-B**	**10**
10	4.6	8	14.5	14	57.6	25	18.1	13	**133149**	**QSY-10H-8-B**	**10**
12	5.9	10	17.5	18	67.2	29	20.2	22	**133151**	**QSY-12H-10-B**	**10**

1) Packaging unit quantity

Push-in Y-fitting QSYL
Orientable
Male thread with external hex

R thread

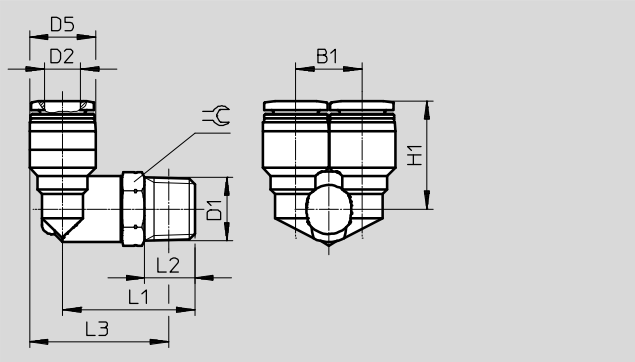

G thread

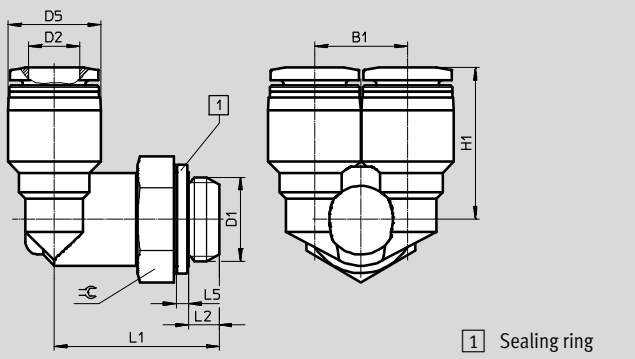

Dimensions and ordering data														
Connection D1	Nominal size [mm]	Tubing O.D. D2	B1	D5 ∅	H1	L1	L2	L3	L5	⬡	Weight/ piece [g]	Part No.	Type	PU[1]
R thread														
R⅛	3.9	4	10.3	10	18.2	23	8	24	–	10	13	★ 153172	QSYL-⅛-4	1
	4.2	6	12.5	12.5	19.8	23.5	8	25.8	–	10	15	★ 153173	QSYL-⅛-6	1
	5.7	8	14.5	14.5	22.7	25	8	28.3	–	12	20	★ 153175	QSYL-⅛-8	1
R¼	5.3	6	12.5	12.5	21.8	29	11	29.2	–	14	22	★ 153174	QSYL-¼-6	1
	7.3	8	14.5	14.5	23.7	29	11	30.2	–	14	25	★ 153176	QSYL-¼-8	1
	8	10	17.5	17.5	26	29.5	11	32.2	–	14	32	★ 153178	QSYL-¼-10	1
R⅜	7.3	8	14.5	14.5	24.7	32	12	32.9	–	17	37	★ 153177	QSYL-⅜-8	1
	9.2	10	17.5	17.5	27	32.5	12	34.9	–	17	43	★ 153179	QSYL-⅜-10	1
	9.7	12	21	21	29.2	33.5	12	37.7	–	17	51	★ 153180	QSYL-⅜-12	1
R½	10.6	12	21	21	30.2	38	15	40.3	–	21	74	★ 153181	QSYL-½-12	1
G thread with sealing ring														
G⅛	3.9	4	10.3	10	18.2	22.1	4.2	–	1.9	13	16	186189	QSYL-G⅛-4	1
	4.2	6	12.5	12.5	19.8	22.6	4.2	–	1.9	13	18	186190	QSYL-G⅛-6	1
	5.7	8	14.5	14.5	22.7	23.1	4.2	–	1.9	13	20	186192	QSYL-G⅛-8	1
G¼	5.3	6	12.5	12.5	21.8	25.7	4.8	–	1.9	17	26	186191	QSYL-G¼-6	1
	7.3	8	14.5	14.5	23.7	25.7	4.8	–	1.9	17	29	186193	QSYL-G¼-8	1
	8	10	17.5	17.5	26	26.2	4.8	–	1.9	17	36	186195	QSYL-G¼-10	1
G⅜	7.3	8	14.5	14.5	24.7	28.2	5.8	–	2.4	19	38	186194	QSYL-G⅜-8	1
	9.2	10	17.5	17.5	27	28.7	5.8	–	2.4	19	45	186196	QSYL-G⅜-10	1
	9.7	12	21	21	29.2	29.7	5.8	–	2.4	19	52	186197	QSYL-G⅜-12	1
G½	10.6	12	21	21	30.2	33.7	6.8	–	2.4	24	80	186198	QSYL-G½-12	1

1) Packaging unit quantity

Festo core product range
★ Generally ready for shipping ex works in 24 hours
☆ Generally ready for shipping ex works in 5 days

Push-in Y-fitting QSYLV
Orientable
Male thread with external hex

R thread

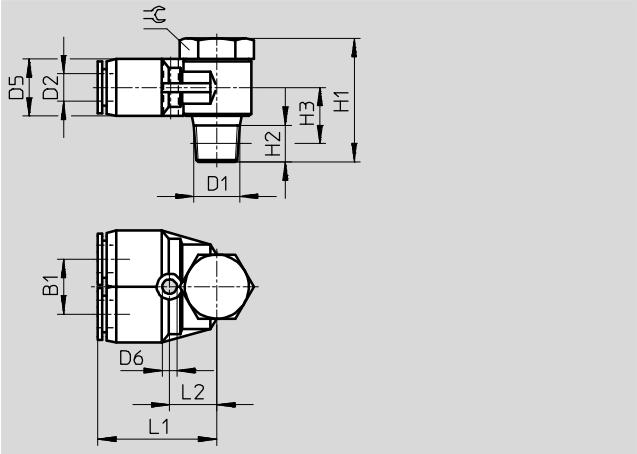

G thread

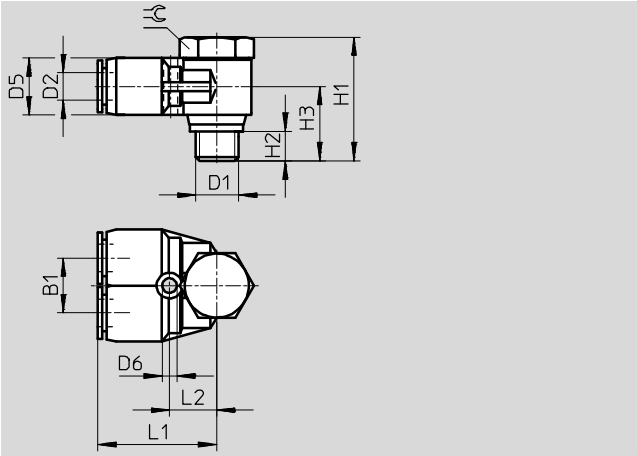

Dimensions and ordering data															
Connection D1	Nominal size [mm]	Tubing O.D. D2	B1	D5 ∅	D6 ∅	H1	H2	H3	L1	L2	⇌	Weight/ piece [g]	Part No.	Type	PU[1]
R thread															
R⅛	3.3	6	12	12.5	3.2	27	8	11	26	10.5	14	24.5	**153192**	**QSYLV-⅛-6**	**1**
R¼	4.4	8	14	14.5	3.2	31.5	11	12.5	29	12.5	17	41.5	**153193**	**QSYLV-¼-8**	**1**
R⅜	5.7	10	17	17.5	4.2	36	12	14.5	33.5	15	21	69.5	**153194**	**QSYLV-⅜-10**	**1**
R½	7.1	12	20	21	4.2	40	15	17.5	37.5	17	24	102	**153195**	**QSYLV-½-12**	**1**
G thread with sealing ring															
G⅛	3.5	6	12	12.4	3.2	26.2	5.1	15.2	27.5	12	17	31	**186209**	**QSYLV-G⅛-6**	**1**
G¼	4.7	8	14	14.4	3.2	28.4	5.6	16.4	30.9	14	19	48	**186210**	**QSYLV-G¼-8**	**1**
G⅜	5.2	10	17	17.6	4.2	33.4	6.6	19.4	34	15.5	21	73	**186211**	**QSYLV-G⅜-10**	**1**
G½	7	12	20	21	4.2	37.4	7.6	21.9	38.9	18.5	27	123	**186212**	**QSYLV-G½-12**	**1**

1) Packaging unit quantity

Push-in fittings QS-V0, weld spatter resistant

Technical data

Push-in fitting QS-V0

Male thread with external hex

R thread

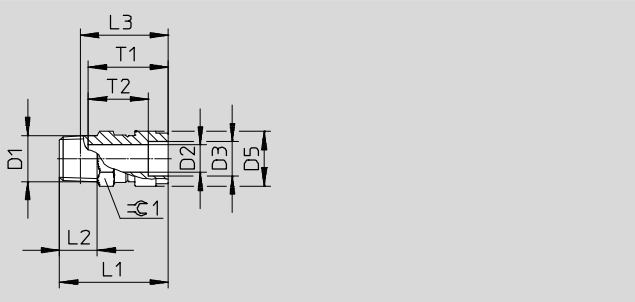

G thread

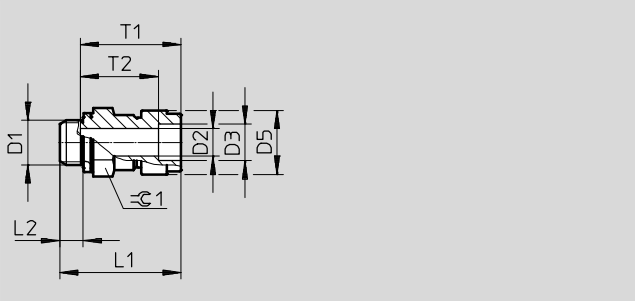

Dimensions and ordering data														
Pneumatic connection		Nom-	Dimensions [mm]								Weight/	Part No.	Type	PU[1]
Male thread	For tubing O.D.	inal	D3	D5	L1	L2	L3	T1	T2	1	piece			
		size	∅	∅										
D1	D2	[mm]									[g]			
R thread														
R⅛	4	3	6	12	26.1	8	22.1	20	15	10	7.9	**132888**	**QS-V0-1/8-4**	**10**
	6	5	8	14	27.4	8	23.4	22.1	16.5	12	8.7	**160500**	**QS-V0-1/8-6**	**10**
	8	6	10	16	33.1	8	29.1	23.4	17.5	14	14	**160501**	**QS-V0-1/8-8**	**10**
R¼	6	5	8	14	28.8	11	22.7	22.1	16.5	14	15	**160502**	**QS-V0-1/4-6**	**10**
	8	7	10	16	31.8	11	25.8	23.4	17.5	14	15	**160503**	**QS-V0-1/4-8**	**10**
	10	8.5	12	19	35	11	29	25.9	20	17	20	**160504**	**QS-V0-1/4-10**	**10**
	12	8.5	14	22	40.9	11	34.9	28.3	23.3	21	28	**160505**	**QS-V0-1/4-12**	**1**
R⅜	8	7	10	16	30.7	12	24.4	23.4	17.5	17	25	**160506**	**QS-V0-3/8-8**	**10**
	10	9	12	19	34.5	12	28.2	25.9	20	17	25	**160507**	**QS-V0-3/8-10**	**10**
	12	11	14	22	36.9	12	30.6	28.3	23.3	21	31	**160508**	**QS-V0-3/8-12**	**1**
R½	10	9	12	19	35.6	15	27.4	25.9	20	21	46	**160509**	**QS-V0-1/2-10**	**1**
	12	11	14	22	38.9	15	30.7	28.3	23.3	21	45	**160510**	**QS-V0-1/2-12**	**1**
G thread with sealing ring														
G⅛	6	5	8	14	25.7	4.2	–	22.1	16.5	13	8.7	**186314**	**QS-V0-G1/8-6**	**10**
	8	6	10	16	31	4.2	–	23.4	17.5	14	13	**186315**	**QS-V0-G1/8-8**	**10**
G¼	6	5	8	14	26.3	4.8	–	22.1	16.5	17	17	**186316**	**QS-V0-G1/4-6**	**10**
	8	7	10	16	27.1	4.8	–	23.4	17.5	17	15	**186317**	**QS-V0-G1/4-8**	**10**
	10	8.5	12	19	34.1	4.8	–	25.9	20	17	22	**186318**	**QS-V0-G1/4-10**	**10**
	12	8.5	14	22	39.1	4.8	–	28.3	23.3	21	30	**186319**	**QS-V0-G1/4-12**	**1**
G⅜	8	7	10	16	26.9	5.8	–	23.4	17.5	19	22	**186320**	**QS-V0-G3/8-8**	**10**
	10	9	12	19	30.6	5.8	–	25.9	20	19	23	**186321**	**QS-V0-G3/8-10**	**10**
	12	11	14	22	36.5	5.8	–	28.3	23.3	21	33	**186322**	**QS-V0-G3/8-12**	**1**
G½	10	9	12	19	31.3	6.8	–	25.9	20	24	43	**186323**	**QS-V0-G1/2-10**	**1**
	12	11	14	22	33	6.8	–	28.3	23.3	24	40	**186324**	**QS-V0-G1/2-12**	**1**

1) Packaging unit quantity

Push-in fittings QS-V0, weld spatter resistant

Technical data

Push-in connector QS-V0

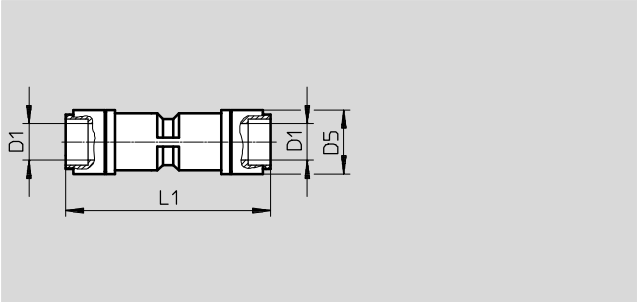

Dimensions and ordering data							
Pneumatic connection	Nom-	Dimensions [mm]		Weight/	Part No.	Type	PU[1]
For tubing O.D.	inal	D5	L1	piece			
D1	size [mm]	∅		[g]			
4	2.6	12	41	6	**132890**	**QS-V0-4**	**10**
6	4	14	45.1	7.9	**160546**	**QS-V0-6**	**10**
8	5	16	48.2	11	**160547**	**QS-V0-8**	**10**
10	6.7	19	51.8	18	**160548**	**QS-V0-10**	**10**
12	8.7	22.2	57.8	26	**160549**	**QS-V0-12**	**1**

1) Packaging unit quantity

Push-in fittings QS-V0, weld spatter resistant

Technical data

Push-in L-fitting QSL-V0

Male thread with external hex

R thread

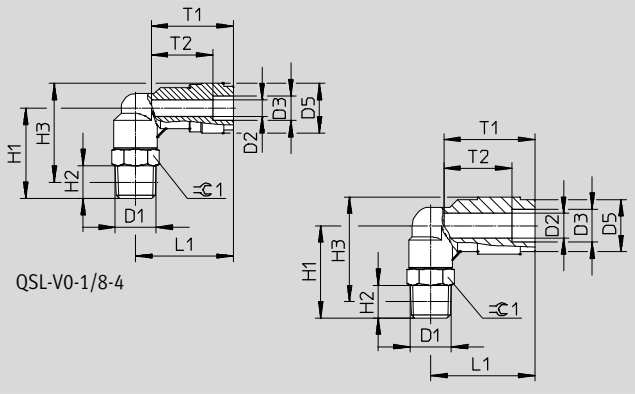

G thread

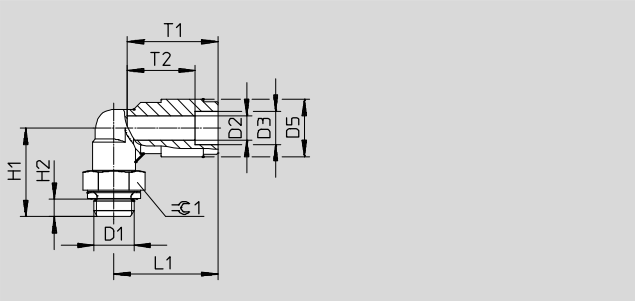

Dimensions and ordering data															
Pneumatic connection		Nom-	Dimensions [mm]									Weight/	Part No.	Type	PU[1]
Male thread	For tubing O.D.	inal	D3	D5	H1	H2	H3	L1	T1	T2	1	piece			
		size	∅	∅											
D1	D2	[mm]										[g]			
R thread															
R⅛	4	2.8	6	12	22	8	24	23.8	20	15	10	11	**132891**	**QSL-V0-1/8-4**	**10**
	6	4.2	8	14	22.5	8	25.5	25.4	22.1	16.5	10	12	**160511**	**QSL-V0-1/8-6**	**10**
	8	6	10	16	24	8	28	27.9	23.3	17.4	12	15	**160512**	**QSL-V0-1/8-8**	**10**
R¼	6	4.3	8	14	28	11	29	28.9	22.1	16.5	14	20	**160513**	**QSL-V0-1/4-6**	**10**
	8	6.7	10	16	28	11	30	28.9	23.3	17.4	14	21	**160514**	**QSL-V0-1/4-8**	**10**
	10	8	12	19	28.5	11	32	31.2	25.4	19.5	14	25	**160515**	**QSL-V0-1/4-10**	**10**
	12	8	14	22.2	29.8	11	34.8	34	28.4	23.4	14	29	**160516**	**QSL-V0-1/4-12**	**1**
R⅜	8	6.7	10	16	31	12	32.7	29.9	23.3	17.4	17	32	**160517**	**QSL-V0-3/8-8**	**10**
	10	8.3	12	19	32	12	35.2	32.2	25.4	19.5	17	36	**160518**	**QSL-V0-3/8-10**	**10**
	12	10	14	22.2	32.5	12	37.3	34.7	28.4	23.4	17	40	**160519**	**QSL-V0-3/8-12**	**1**
R½	10	8.3	12	19	36	15	37.3	32.7	25.4	19.5	21	59	**160520**	**QSL-V0-1/2-10**	**1**
	12	10.3	14	22.2	36.5	15	39.4	35.7	28.4	23.4	21	64	**160521**	**QSL-V0-1/2-12**	**1**
G thread with sealing ring															
G⅛	6	4.2	8	14	21.6	4.2	–	25.4	22.1	16.5	13	15	**186325**	**QSL-V0-G1/8-6**	**10**
	8	6	10	16	22.1	4.2	–	27.9	23.3	17.4	13	16	**186326**	**QSL-V0-G1/8-8**	**10**
G¼	6	4.3	8	14	24.7	4.8	–	26.9	22.1	16.5	17	23	**186327**	**QSL-V0-G1/4-6**	**10**
	8	6.7	10	16	24.7	4.8	–	28.9	23.3	17.4	17	25	**186328**	**QSL-V0-G1/4-8**	**10**
	10	8	12	19	25.2	4.8	–	31.2	25.4	19.5	17	29	**186329**	**QSL-V0-G1/4-10**	**10**
	12	8	14	22.2	26.5	4.8	–	34	28.4	23.4	17	33	**186330**	**QSL-V0-G1/4-12**	**1**
G⅜	8	6.7	10	16	27.2	5.8	–	29.9	23.3	17.4	19	33	**186331**	**QSL-V0-G3/8-8**	**10**
	10	8.3	12	19	28.2	5.8	–	32.2	25.4	19.5	19	37	**186332**	**QSL-V0-G3/8-10**	**10**
	12	10	14	22.2	28.7	5.8	–	34.7	28.4	23.4	19	41	**186333**	**QSL-V0-G3/8-12**	**1**
G½	10	8.3	12	19	31.7	6.8	–	32.7	25.4	19.5	24	65	**186334**	**QSL-V0-G1/2-10**	**1**
	12	10.3	14	22.2	32.2	6.8	–	35.7	28.4	23.4	24	69	**186335**	**QSL-V0-G1/2-12**	**1**

1) Packaging unit quantity

Push-in fittings QS-V0, weld spatter resistant

Technical data

Push-in L-connector QSL-V0

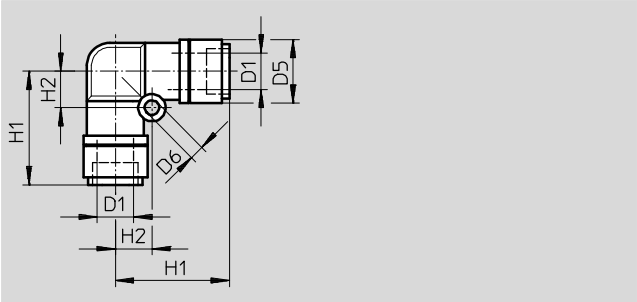

Dimensions and ordering data									
Pneumatic connection	Nom-	Dimensions [mm]				Weight/	Part No.	Type	PU[1]
For tubing O.D.	inal	D5	D6	H1	H2	piece			
D1	size [mm]	∅	∅			[g]			
4	2.3	12	3.2	22	6.5	6.4	**132893**	**QSL-V0-4**	**10**
6	3.6	14	3.2	25.2	8	8.7	**160540**	**QSL-V0-6**	**10**
8	4.6	16	4.2	27.6	10	13	**160541**	**QSL-V0-8**	**10**
10	6.2	19	4.2	31.4	12	20	**160542**	**QSL-V0-10**	**10**
12	7.7	22.2	4.2	34.4	14	29	**160543**	**QSL-V0-12**	**1**

1) Packaging unit quantity

Push-in T-fitting QST-V0

Male thread with external hex

R thread

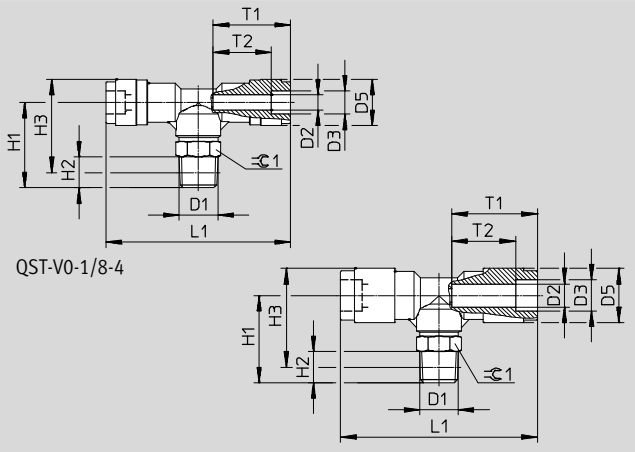

G thread

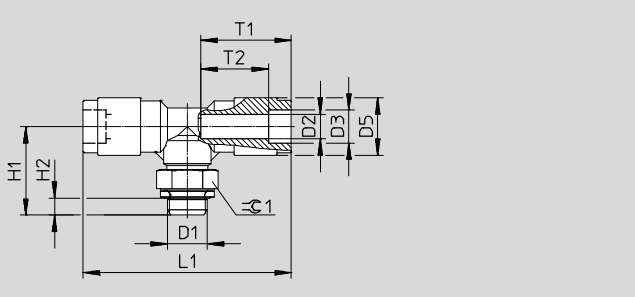

Dimensions and ordering data

Pneumatic connection		Nominal size [mm]	Dimensions [mm]									Weight/ piece [g]	Part No.	Type	PU[1]
Male thread D1	For tubing O.D. D2		D3 ∅	D5 ∅	H1	H2	H3	L1	T1	T2	1				
R thread															
R⅛	4	2.8	6	12	22	8	24	47.6	20	15	10	14	**132894**	**QST-V0-1/8-4**	**10**
	6	4.2	8	14	22.5	8	25.5	50.7	22.1	16.5	10	16	**160522**	**QST-V0-1/8-6**	**10**
	8	6	10	16	24	8	28	55.8	23.3	17.4	12	20	**160523**	**QST-V0-1/8-8**	**10**
R¼	6	4.3	8	14	28	11	29	53.7	22.1	16.5	14	24	**160524**	**QST-V0-1/4-6**	**10**
	8	6.7	10	16	28	11	30	57.8	23.3	17.4	14	26	**160525**	**QST-V0-1/4-8**	**10**
	10	8	12	19	28.5	11	32	62.4	25.4	19.5	14	33	**160526**	**QST-V0-1/4-10**	**10**
	12	8	14	22.2	29.8	11	34.8	67.9	28.4	23.4	14	42	**160527**	**QST-V0-1/4-12**	**1**
R⅜	8	6.7	10	16	31	12	32.7	59.8	23.3	17.4	17	37	**160528**	**QST-V0-3/8-8**	**10**
	10	8.3	12	19	32	12	35.2	64.4	25.4	19.5	17	44	**160529**	**QST-V0-3/8-10**	**10**
	12	10	14	22.2	32.5	12	37.3	69.4	28.4	23.4	17	53	**160530**	**QST-V0-3/8-12**	**1**
R½	10	8.3	12	19	36	15	37.3	65.4	25.4	19.5	21	68	**160531**	**QST-V0-1/2-10**	**1**
	12	10.3	14	22.2	36.5	15	39.4	71.4	28.4	23.4	21	77	**160532**	**QST-V0-1/2-12**	**1**
G thread with sealing ring															
G⅛	6	4.2	8	14	21.6	4.2	–	50.8	22.1	16.5	13	19	**186336**	**QST-V0-G1/8-6**	**10**
	8	6	10	16	22.1	4.2	–	55.8	23.3	17.4	13	21	**186337**	**QST-V0-G1/8-8**	**10**
G¼	6	4.3	8	14	24.7	4.8	–	53.8	22.1	16.5	17	28	**186338**	**QST-V0-G1/4-6**	**10**
	8	6.7	10	16	24.7	4.8	–	57.8	23.3	17.4	17	30	**186339**	**QST-V0-G1/4-8**	**10**
	10	8	12	19	25.2	4.8	–	62.4	25.4	19.5	17	37	**186340**	**QST-V0-G1/4-10**	**10**
	12	8	14	22.2	26.5	4.8	–	67.9	28.4	23.4	17	46	**186341**	**QST-V0-G1/4-12**	**1**
G⅜	8	6.7	10	16	27.2	5.8	–	59.8	23.3	17.4	19	39	**186342**	**QST-V0-G3/8-8**	**10**
	10	8.3	12	19	28.2	5.8	–	64.4	25.4	19.5	19	46	**186343**	**QST-V0-G3/8-10**	**10**
	12	10	14	22.2	28.7	5.8	–	69.4	28.4	23.4	19	54	**186344**	**QST-V0-G3/8-12**	**1**
G½	10	8.3	12	19	31.7	6.8	–	65.4	25.4	19.5	24	73	**186345**	**QST-V0-G1/2-10**	**1**
	12	10.3	14	22.2	32.2	6.8	–	71.4	28.4	23.4	24	82	**186346**	**QST-V0-G1/2-12**	**1**

1) Packaging unit quantity

Push-in fittings QS-V0, weld spatter resistant

Technical data

Push-in T-connector QST-V0

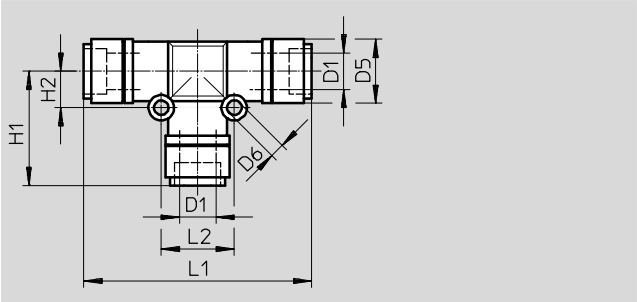

Dimensions and ordering data											
Pneumatic connection	Nom-	Dimensions [mm]						Weight/	Part No.	Type	PU[1]
For tubing O.D.	inal	D5	D6	H1	H2	L1	L2	piece			
D1	size [mm]	∅	∅					[g]			
4	2.6	12	3.2	22.3	6.5	44.6	13	9.4	**132896**	**QST-V0-4**	**10**
6	4	14	3.2	25.15	8	50.3	16	14	**160533**	**QST-V0-6**	**10**
8	5	16	3.2	27.4	9	54.8	18	18	**160534**	**QST-V0-8**	**10**
10	6.7	19	4.2	30.4	12	60.8	24	28	**160535**	**QST-V0-10**	**10**
12	8.7	22.2	4.2	33.2	14	66.8	28	41	**160536**	**QST-V0-12**	**1**

1) Packaging unit quantity

Release tool QSO
Release aid for QS push-in fittings

Dimensions and ordering data				
Tubing O.D.	Weight/ piece [g]	Part No.	Type	PU[1)]
3 … 10	13	**158419**	**QSO**	**1**

1) Packaging unit quantity