Hydraulic Hand Pumps

PMD 6-12-25-45 byB-s

with 4/3 flow divider closed centre with pressure relief valve double acting hand pump for a double acting cylinder for fixing to tank

Specifications:

- Cast iron body
- Piston treated with Niploy
- White zinc plated support lever
- Lever connection Ø 27
- White zinc plated external parts
- Standard colour black
- Oil tank mounting kit included
- Pressure relief valve standard setting: 100 bar

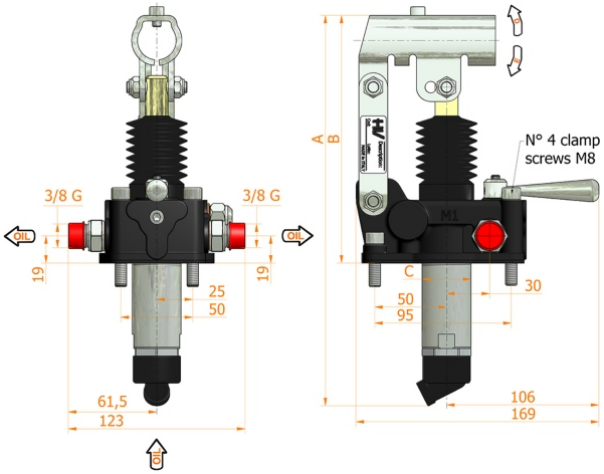

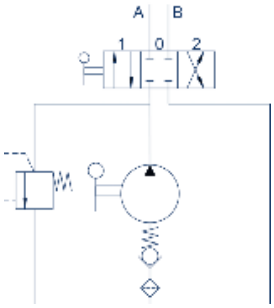

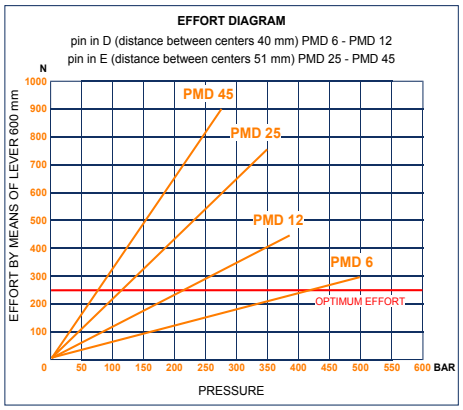

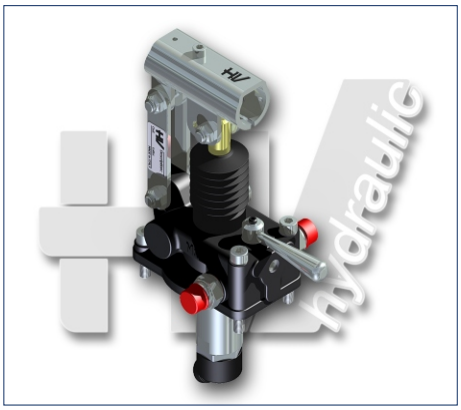

DISPLACEMENT cm³	A mm	B mm	C mm	D °	E °	ACTUAL DISPLACEMENT cm³	PRESSURE BAR		MASS KG	CODE WITHOUT BELLOWS	CODE WITH BELLOWS
							OPTIMAL	MAX			
6	253	166	34	26	31	6,970	420	500	3,400	6054.0019	6054.0046
12	253	166	34	26	31	12,095	220	380	3,400	6055.0019	6055.0046
25	273	172	34	30	30	25,280	120	350	3,450	6056.0019	6056.0046
45	283	172	40	45	33	44,532	80	280	3,500	6057.0019	6057.0046