MATERIALS

Body	9 S Mn Pb 23 - UNI 5105 - Press forg.
Needle	35 S Mn Pb 23 - UNI 5105 - Burnished
O R	Nitrile
Antiextrusion ring	PTFE
Handwheel	Nylon 66

All components are surface treated and protected

SPECIAL VERSIONS ONLY FOR TYPE 14 SUPPLIED ON REQUEST FOR QUANTITIES OF AT LEAST 200 PIECES

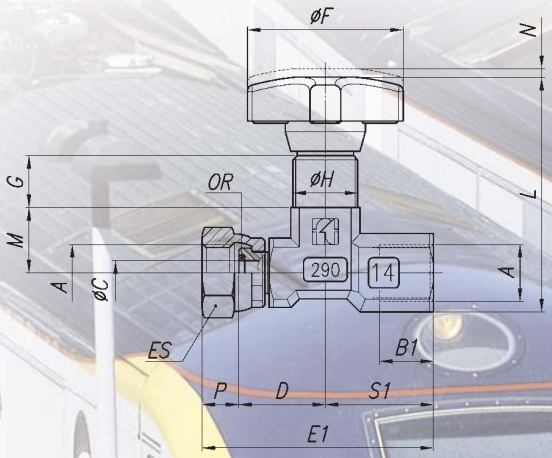

Code FT 290-01
Connection: female-female

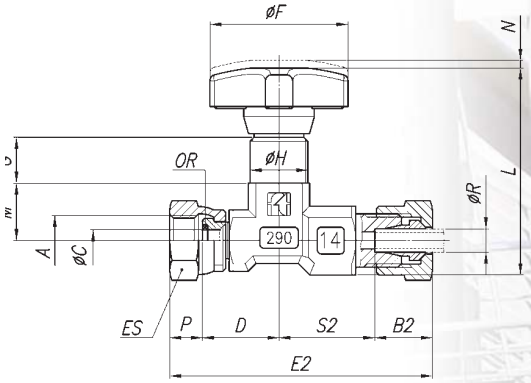

Code FT 290-04
Connection Rigid pipes - DIN 2353

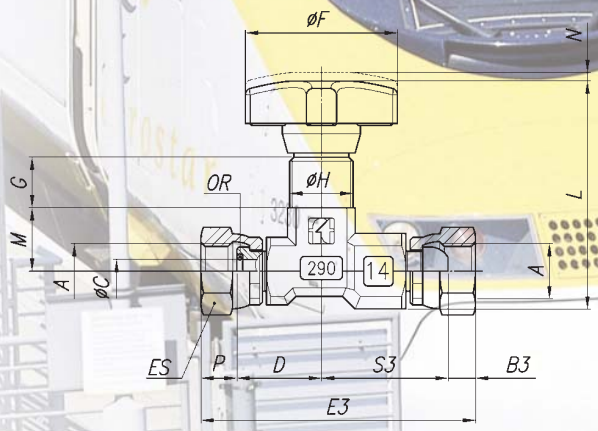

Code FT 290-05
Connection Flexible pipes DIN 3861 - DIN 7611

DIMENSIONS

A	B1	B2	B3	ØC	D	E1	E2	E3	ØF	G	H	L	M	N	P	R	S1	S2	S3	OR	ES	Weight kg
1/4"G	11	15	6,5	5,6	20	54,5	69,5	66	34	12	M15x1	53	15	2	8,5	6	25	25	30	2108	18	01 0,125
																						04 0,150
																						05 0,145