Hydraulic Hand Pumps

PMP 20 s

with release hand knob double acting hand pump for single acting cylinder for fixing to wall

Specifications:

- Cast iron body
- Piston treated with Niploy
- White zinc plated support lever
- Lever connection Ø 27
- White zinc plated external parts
- Standard colour black

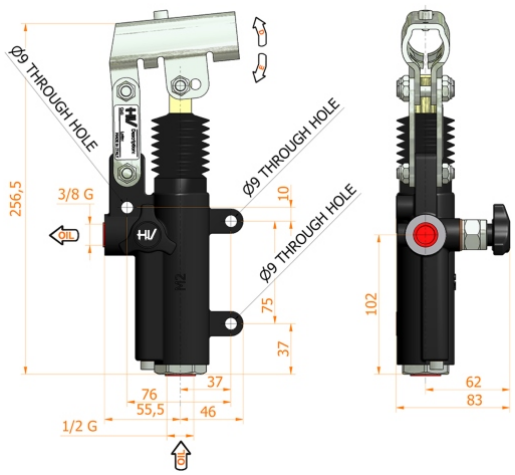

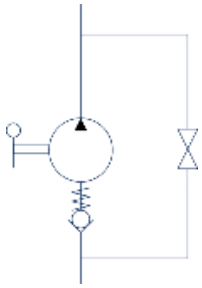

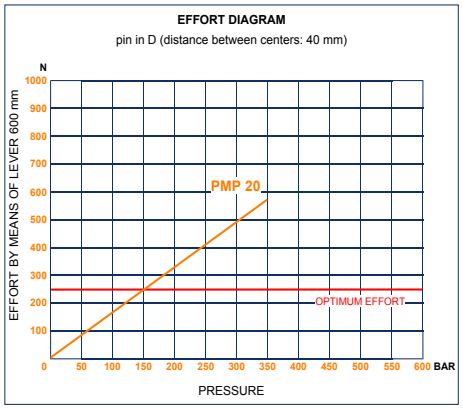

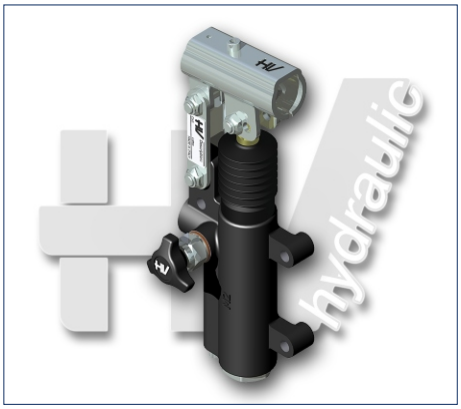

DISPLACEMENT cm³	A mm	B mm	C mm	D °	E °	ACTUAL DISPLACEMENT cm³	PRESSURE BAR		MASS KG	CODE WITHOUT BELLOWS	CODE WITH BELLOWS
							OPTIMAL	MAX			
20	--	--	--	32	30	20,090	150	350	2,650	6074.0054	6074.0059