Square shallow floor box for 8 elements in concrete or raised floor grey Simon 500 Cima

REF. **52050204-035**

BASIC INFORMATION

DESCRIPTION

Floor box and shallow square for 8 elements of the collection Simon 500 Cima. To complete this installation, once configured, it must be combined with a plastic tray for reference G401 and, if you want to, with the flush-mount trim cover, reference 52053204-035 (this in case of not to be installed in the same floor lining). Ideal for both raised floor and concrete floor, whenever we follow the instructions above. This product has all the guarantees of any product of the brand and of this collection, since it is made of metal components of the highest quality and reliability, which allows maximum protection in case of fire and low toxicity (acts so that the fire is not propagate). It measures 329 x 252 x 69 millimetres and for its cleaning we recommend simply use a soft, dry cloth (avoid abrasive cleaners that may damage the box).

FINISH

Grey

MATERIAL

Plastic

COMPATIBILITY

Simon 500 Cima and Simon 27 Play/Simon K45 mechanisms (using a specific adaptor)

PACKAGING CONTENTS

Floor box and installation manual

ETIM CLASS

EC000024

REMARKS

To complete the installation of the product in concrete floors, once configured, it must be combined with a plastic tray (ref.G401). Alternatively, it may be combined with flush-mount trim cover (ref.52053204-035) in cases where the same floor lining is not installed.

simon

TECHNICAL INFORMATION

AVAILABLE MARKET
CE

PROTECTION AGAINST DIRECT ACCESS OF CONTACTS
No

PROTECTION AGAINST ENTRY OF DUST AND SMALL OBJECTS
Yes, thanks to the inclusion of ductile plastic wire outputs

AVAILABLE IN
4, 6 and 8 elements

NUMBER OF CLAMP-HOLDER HOLES
8

DIELECTRIC STRENGTH
No holes or contours, with 2000V at 50 Hz for 1 minute

MAX TEMP DURING CONSTRUCTION WORK (ºC)
+90 ºC

HEAT RESISTANCE (ºC)
+125ºC (according rule IEC 60695-10-2)

IK CLASSIFICATION
08

INSULATION RESISTANCE (V-MΩ)
>5 MOhms at 500V

IP RATING
IP4X

KIT AVAILABILITY
Yes

MAINTENANCE
Clean with a soft, dry cloth. Do not use abrasive cloths or cleaning products that contain chlorine.

TEMPERATURE RANGE DURING INSTALLATION (ºC)
-5 to 60 ºC

NUMBER OF MODULES
8 modules

NUMBER OF PRE-PUNCHED HOLES 55 X 20 MM
8

RAL
7011

RECESS DIMENSION (MM)
250 x 327 mm

NUMBER OF SIDE ENTRANCES
8

VERSION
8 elements

INSTALLATION AND MAINTENANCE

CLAW RANGE OF OPERATION (MM)
Between 11 and 48 mm

REMOVAL OF COMPONENTS
Only with tool

NUMBER OF COVER OPENING POSITIONS
2

EXTINGUISHING (ºC)
+850 ºC / 30 seconds (GWFI in accordance with standard IEC 60695-2-11)

TYPE OF FASTENING
Using fastening claws on the concrete floor tray or on the raised floor tile (supplied with the floor box)

CAN BE INSTALLED IN TRAY
Plástica

INSTALLATION DIRECTION
Horizontal, Vertical

INSTALLATION TYPE
Its design for shallow floors allows it to be installed in any type of raised or concrete floor, combining the latter installation type with tray ref. 4[illegible]

REGULATIONS

REGULATIONS
Directive 2014/35/UE LVD + EN 60670-23:2008

LOGISTICS INFORMATION

UNITARY EAN CODE
8421053093207

UNITARY PACKAGING HEIGHT
0

UNITARY PACKAGING WIDTH
0

UNITARY PACKAGING LENGTH
0

UNITARY PACKAGING VOLUME
0

UNITARY PACKAGING GROSS WEIGHT
2.38

PRODUCT NET WEIGHT
2.38

UNITARY PACKAGING WEIGHT UNIT
KGM

PACKAGING EAN
8421053093207

UNITS CONTAINED PACKAGING
1

PACKAGING HEIGHT
80

PACKAGING WIDTH
280

PACKAGING LENGTH
356

PACKAGING MEASUREMENT UNIT
MMT

PACKAGING VOLUME
7974400

PACKAGING VOLUME UNIT
MMQ

PACKAGING GROSS WEIGHT
0

PACKAGING NET WEIGHT
2.38

PACKAGING WEIGHT UNIT
KGM

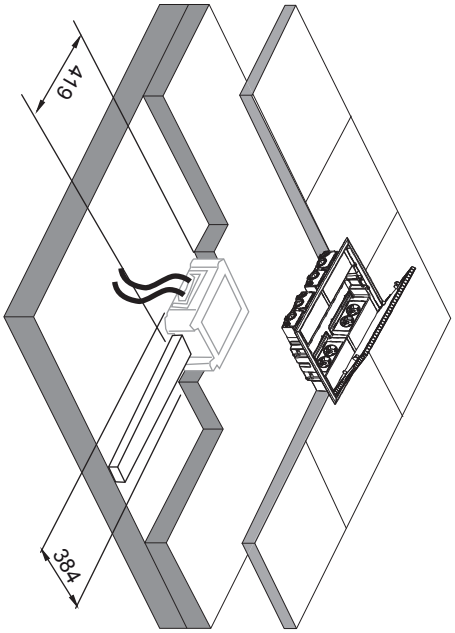
419
384

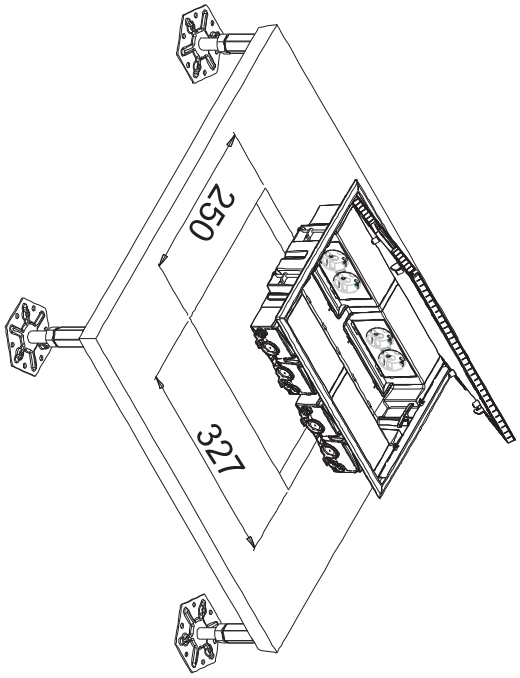
250
327

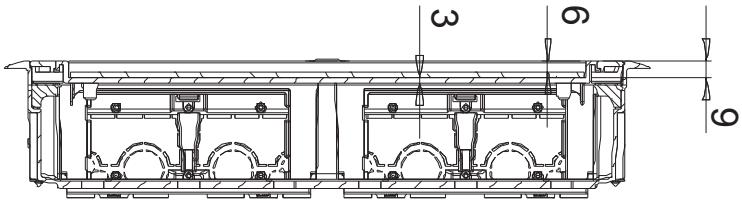
3
6
9

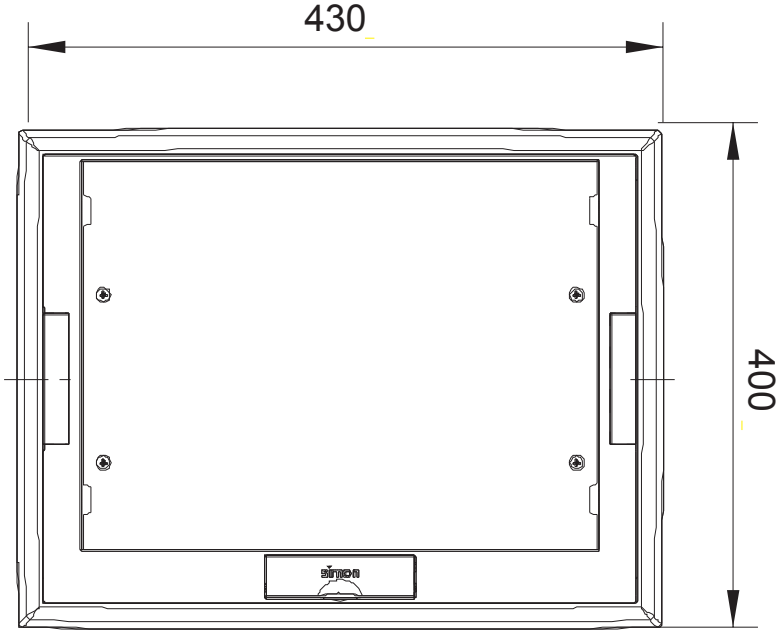
430
400