Cover with viewer for card switch black matte Simon 360

REF. **36000078-098**

BASIC INFORMATION

DESCRIPTION

Cover with viewer for card switch in black finish from the Simon 360 series. The matte finish, in addition to being trendy and integrating into any environment, prevents light reflections and reduces maintenance by minimizing stains and fingerprints. Soft and quality feel that provides a sophisticated product sensation in all colors of the series. Urea is the main material and has high resistance and durability, ensuring an extended lifespan. Cover designed for installation in Simon 75 mechanisms.

FINISH

Matt black

COMPATIBILITY

Mecanismos Simon 75

MATERIAL

Thermoplastic,Thermostable,Steel

ETIM CLASS

EC000011

REMARKS

Available in 3 matte finishes s360. Frame available in the same color as the selected interior to create a single-color set or the possibility of a bicolor set. For cleaning, it is recommended to use a cloth slightly dampened with soapy water, avoiding the use of abrasive cloths or cleaners containing chlorine, to prevent damage to the product's surface.

TECHNICAL INFORMATION

INDICATOR FUNCTION
Yes

IP RATING
IP20

MAINTENANCE
Clean with a soft, dry cloth. Do not use abrasive cloths or cleaning products that contain chlorine.

RAL
9005

INSTALLATION AND MAINTENANCE

REMOVAL OF COVER
Only with tool

LOGISTICS INFORMATION

UNITARY EAN CODE
8421053440841

UNITARY PACKAGING HEIGHT
0

UNITARY PACKAGING WIDTH
0

UNITARY PACKAGING LENGTH
0

UNITARY PACKAGING MEASUREMENT UNIT
MMT

UNITARY PACKAGING VOLUME
0

UNITARY PACKAGING VOLUME UNIT
MMQ

UNITARY PACKAGING GROSS WEIGHT
0.025

PRODUCT NET WEIGHT
0.02

UNITARY PACKAGING WEIGHT UNIT
KGM

PACKAGING EAN
8421053440858

UNITS CONTAINED PACKAGING
5

PACKAGING HEIGHT
85

PACKAGING WIDTH
80

PACKAGING LENGTH
120

PACKAGING MEASUREMENT UNIT
MMT

PACKAGING VOLUME
816000

PACKAGING VOLUME UNIT
MMQ

PACKAGING GROSS WEIGHT
0.134

PACKAGING NET WEIGHT
0.1

PACKAGING WEIGHT UNIT
KGM

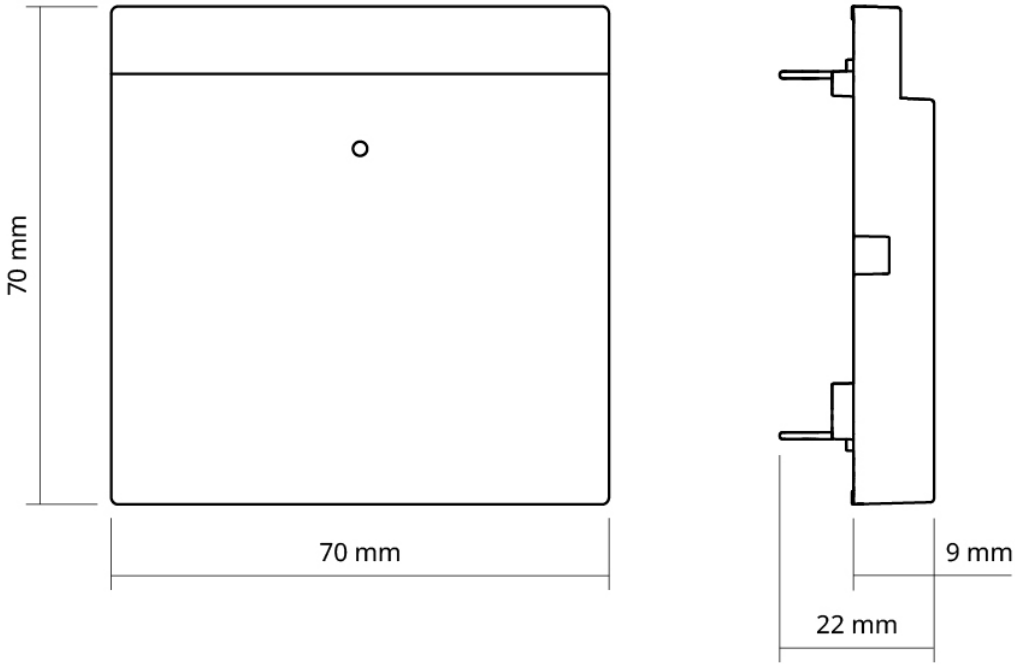
70 mm
70 mm
9 mm
22 mm