# Double push button switch 10AX 250V~ with quick terminal connection system Simon 360

REF. **36010398-039**

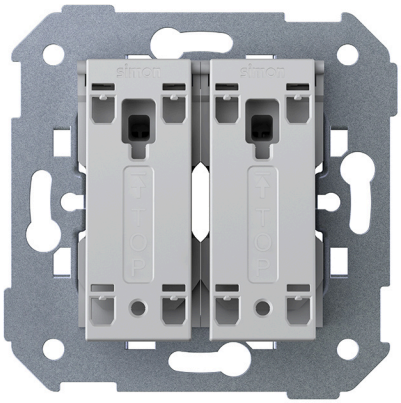

## BASIC INFORMATION

### DESCRIPTION

Double push button switch 10AX 250V~ with quick terminal connection system from the Simon 360 series. The push mechanism allows all keys to remain aligned in any configuration. Pleasant to the touch, to the sound, and to the visual balance.

### MATERIAL

Plastic,Metal

### COMPATIBILITY

Molduras Simon 360

### ETIM CLASS

EC001590

## TECHNICAL INFORMATION

**NUMBER OF CONTACTS**
4

**FORMAT**
Push-button

**FREQUENCY**
50 - 60 Hz

**INDICATOR FUNCTION**
No

**CURRENT (A)**
10 AX

**IP RATING**
IP20

**LINKABLE**
No

**MONOBLOCK**
No

**NOMINAL VOLTAGE (V~)**
250 V~

**POWER SUPPLY (V~)**
127/230 V~

**RECESS DIMENSION (MM)**
40

**VOLTAGE (V~)**
127/230 V~

**NUMBER OF WIRES**
4

## INSTALLATION AND MAINTENANCE

**CABLE STRIPPING NECESSARY (MM)**
15

**CLAW**
Simon 27

**REMOVAL OF COVER**
Only with tool

**INSTALLATION DIRECTION**
Horizontal, Vertical

**TYPE OF TERMINAL CONNECTION - FUNCTION 1**
Fast

## LOGISTICS INFORMATION

UNITARY EAN CODE
8421053438541

UNITARY PACKAGING HEIGHT
0

UNITARY PACKAGING WIDTH
0

UNITARY PACKAGING LENGTH
0

UNITARY PACKAGING MEASUREMENT UNIT
MMT

UNITARY PACKAGING VOLUME
0

UNITARY PACKAGING VOLUME UNIT
MMQ

UNITARY PACKAGING GROSS WEIGHT
0.01

PRODUCT NET WEIGHT
0.01

UNITARY PACKAGING WEIGHT UNIT
KGM

PACKAGING EAN
8421053438558

UNITS CONTAINED PACKAGING
10

PACKAGING HEIGHT
165

PACKAGING WIDTH
85

PACKAGING LENGTH
225

PACKAGING MEASUREMENT UNIT
MMT

PACKAGING VOLUME
3155625

PACKAGING VOLUME UNIT
MMQ

PACKAGING GROSS WEIGHT
0.08

PACKAGING NET WEIGHT
0.07

PACKAGING WEIGHT UNIT
KGM

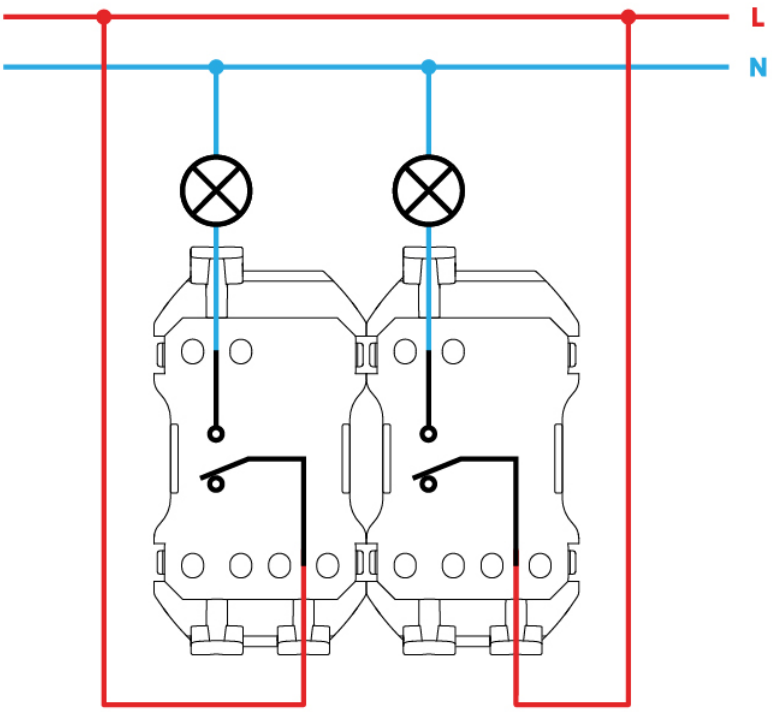
L
N

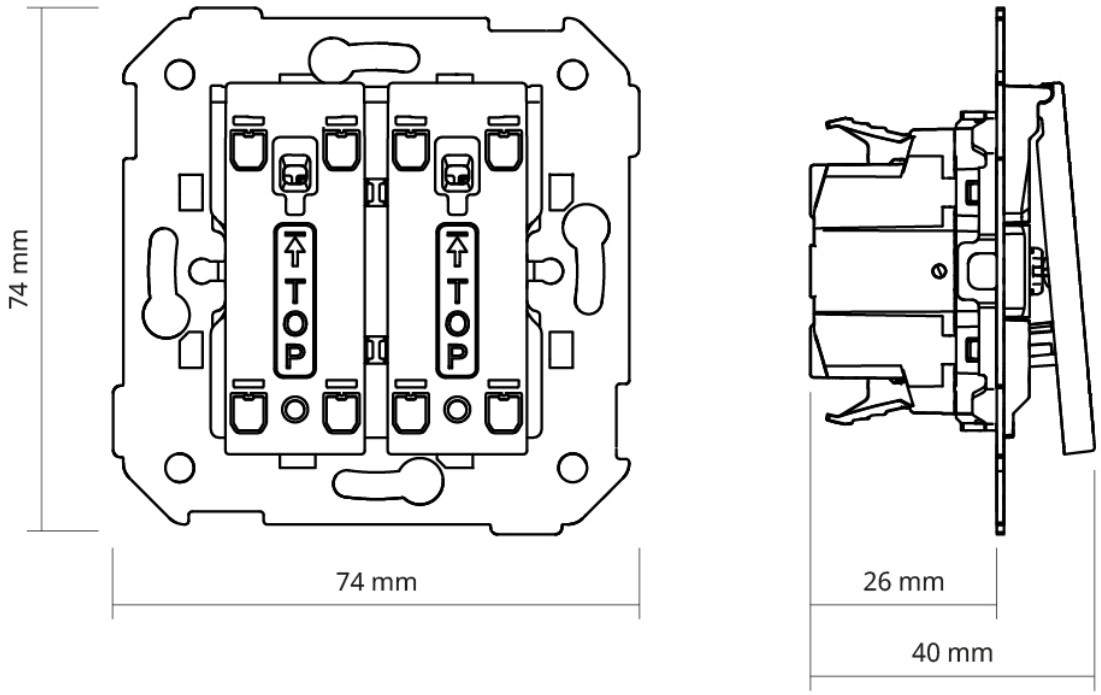
74 mm
TOP
TOP
74 mm
26 mm
40 mm