P40 socket outlet 16A with screw terminal connection 2 elements red K45

REF. **K05/6**

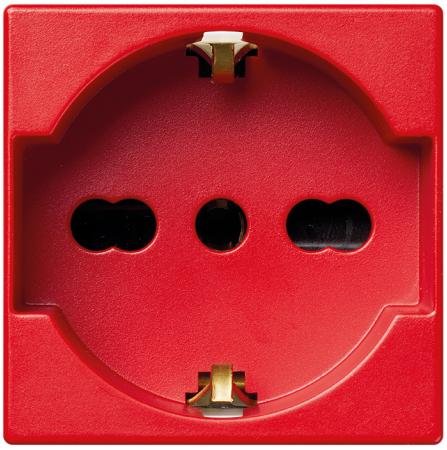

BASIC INFORMATION

FINISH
Red

MATERIAL
Plastic

COMPATIBILITY
Simon K45 enclosures for installation in wall, floor, ceiling, and furniture, and Simon 500 Cima enclosures (requires combining with the K45 to 500 Cima adapter ref. 50012088-030).

ETIM CLASS
EC000125

TECHNICAL INFORMATION

FORMAT
P40

IP RATING
IP20

RAL
3002

CURRENT (A)
16 A

MAINTENANCE
Clean with a soft, dry cloth. Do not use abrasive cloths or cleaning products that contain chlorine.

INSTALLATION AND MAINTENANCE

CABLE STRIPPING NECESSARY (MM)
12

EXTINGUISHING (ºC)
+850 ºC / 30 seconds (GWFI in accordance with standard IEC 60695-10-2)

REMOVAL OF THE SOCKET
Only with tool

TYPE OF TERMINAL CONNECTION - FUNCTION 1
Screw

LOGISTICS INFORMATION

UNITARY PACKAGING HEIGHT
0

UNITARY PACKAGING WIDTH
0

UNITARY PACKAGING LENGTH
0

UNITARY PACKAGING VOLUME
0

UNITARY PACKAGING GROSS WEIGHT
0.04

PRODUCT NET WEIGHT
0.04

UNITARY PACKAGING WEIGHT UNIT
KGM

PACKAGING EAN
8421053314166

UNITS CONTAINED PACKAGING
10

PACKAGING HEIGHT
245

PACKAGING WIDTH
50

PACKAGING LENGTH
140

PACKAGING MEASUREMENT UNIT
MMT

PACKAGING VOLUME
1715000

PACKAGING VOLUME UNIT
MMQ

PACKAGING GROSS WEIGHT
0.484

PACKAGING NET WEIGHT
0.4

PACKAGING WEIGHT UNIT
KGM

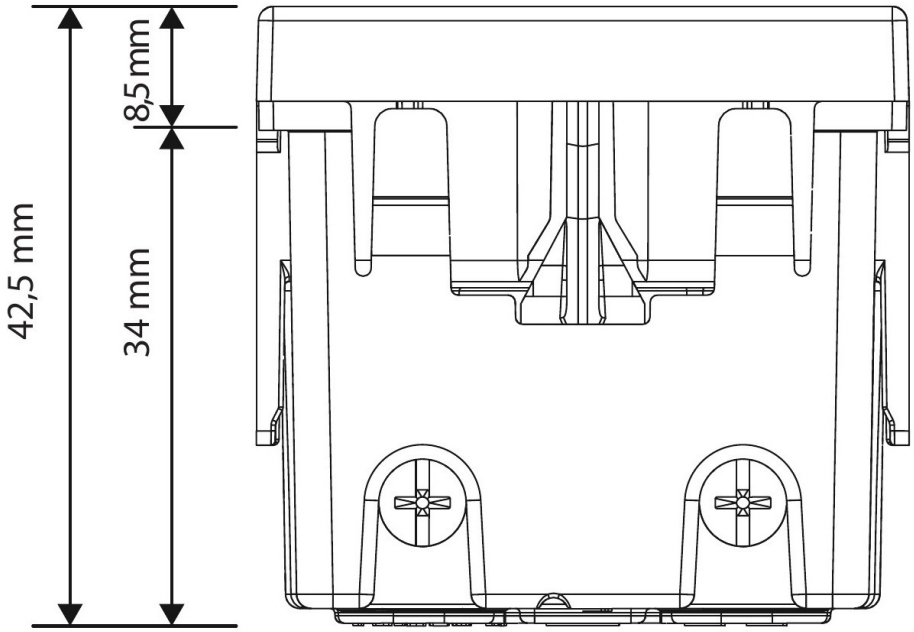
8,5 mm
42,5 mm
34 mm

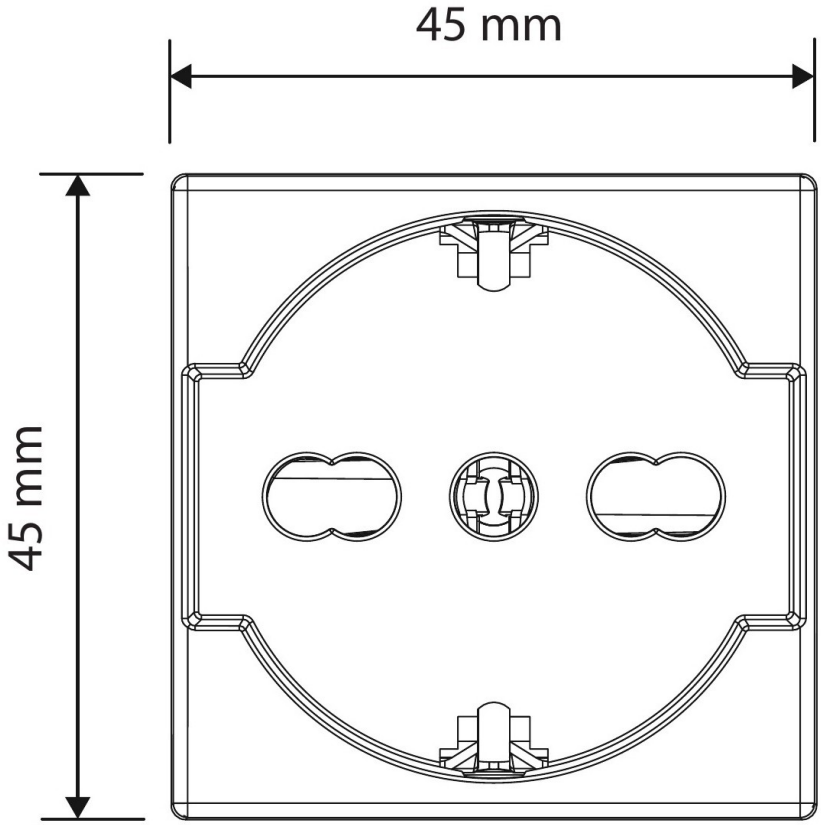
45 mm
45 mm