Schuko socket cover white matte Simon 360

REF. **36000041-190**

BASIC INFORMATION

DESCRIPTION

Cover for schuko socket in white finish from the Simon 360 series. The matte finish, besides being trendy and integrating into any environment, prevents light reflections and reduces maintenance by decreasing stains and fingerprints. Soft and quality feel that provides a sense of a sophisticated product in all colors of the series. Urea is the main material and has high resistance and durability, ensuring a long service life. Cover designed for installation in Simon 75 mechanisms.

FINISH

Matt white

COMPATIBILITY

Tomada Simon 75

MATERIAL

Steel,Thermostable

ETIM CLASS

EC000011

REMARKS

Available in 3 matte finishes s360. Frame available in the same color as the selected interior to create a single-color set or the possibility of a bicolor set. For cleaning, it is recommended to use a cloth slightly dampened with soapy water, avoiding the use of abrasive cloths or cleaners containing chlorine, to prevent damage to the product's surface.

TECHNICAL INFORMATION

FORMAT
Schuko

INDICATOR FUNCTION
No

IP RATING
IP20

MAINTENANCE
Clean with a soft, dry cloth. Do not use abrasive cloths or cleaning products that contain chlorine.

INSTALLATION AND MAINTENANCE

REMOVAL OF COVER
Only with tool

INSTALLATION DIRECTION
Horizontal, Vertical

LOGISTICS INFORMATION

UNITARY EAN CODE
8421053437117

UNITARY PACKAGING HEIGHT
0

UNITARY PACKAGING WIDTH
0

UNITARY PACKAGING LENGTH
0

UNITARY PACKAGING MEASUREMENT UNIT
MMT

UNITARY PACKAGING VOLUME
0

UNITARY PACKAGING VOLUME UNIT
MMQ

UNITARY PACKAGING GROSS WEIGHT
0.05

PRODUCT NET WEIGHT
0.05

UNITARY PACKAGING WEIGHT UNIT
KGM

PACKAGING EAN
8421053434529

UNITS CONTAINED PACKAGING
10

PACKAGING HEIGHT
92

PACKAGING WIDTH
176

PACKAGING LENGTH
222

PACKAGING MEASUREMENT UNIT
MMT

PACKAGING VOLUME
3594624

PACKAGING VOLUME UNIT
MMQ

PACKAGING GROSS WEIGHT
0.5

PACKAGING NET WEIGHT
0.5

PACKAGING WEIGHT UNIT
KGM

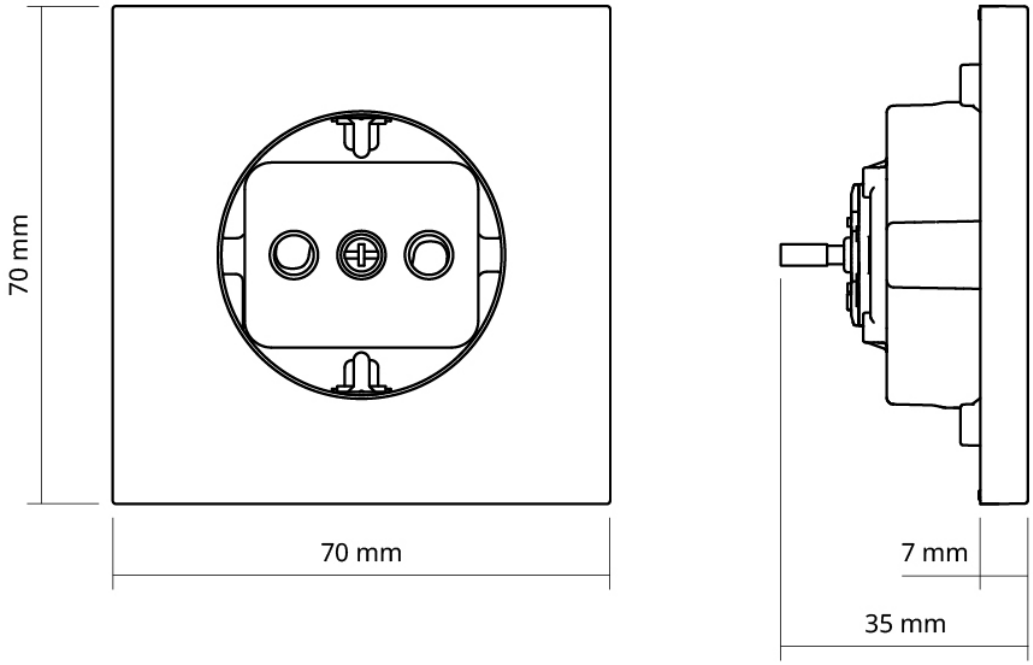
70 mm
70 mm
7 mm
35 mm