Double momentary push-button 10A 250V~ quick terminal Simon 360

REF. **36010396-039**

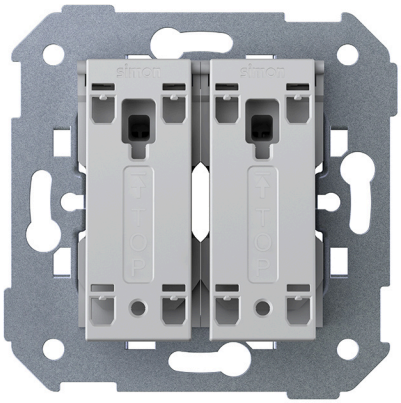

BASIC INFORMATION

DESCRIPTION

Double push button 10A 250V~ with quick terminal connection system from the Simon 360 series. The push mechanism allows all keys to be always aligned in any configuration. A pleasure to the touch, to the sound, and to the visual balance.

MATERIAL

Plastic,Metal

COMPATIBILITY

Molduras Simon 360

ETIM CLASS

EC000029

TECHNICAL INFORMATION

NUMBER OF CONTACTS
4

FORMAT
Push-button

FREQUENCY
50 - 60 Hz

INDICATOR FUNCTION
No

CURRENT (A)
10 A

IP RATING
IP20

LINKABLE
No

MONOBLOCK
No

NOMINAL VOLTAGE (V~)
250 V~

POWER SUPPLY (V~)
127/230 V~

RECESS DIMENSION (MM)
40

VOLTAGE (V~)
127/230 V~

NUMBER OF WIRES
4

INSTALLATION AND MAINTENANCE

CABLE STRIPPING NECESSARY (MM)
15

CLAW
Simon 27

REMOVAL OF COVER
Only with tool

INSTALLATION DIRECTION
Horizontal, Vertical

TYPE OF TERMINAL CONNECTION - FUNCTION 1
Fast

LOGISTICS INFORMATION

UNITARY EAN CODE
8421053438503

UNITARY PACKAGING HEIGHT
0

UNITARY PACKAGING WIDTH
0

UNITARY PACKAGING LENGTH
0

UNITARY PACKAGING MEASUREMENT UNIT
MMT

UNITARY PACKAGING VOLUME
0

UNITARY PACKAGING VOLUME UNIT
MMQ

UNITARY PACKAGING GROSS WEIGHT
0.068

PRODUCT NET WEIGHT
0.063

UNITARY PACKAGING WEIGHT UNIT
KGM

PACKAGING EAN
8421053438510

UNITS CONTAINED PACKAGING
10

PACKAGING HEIGHT
165

PACKAGING WIDTH
85

PACKAGING LENGTH
225

PACKAGING MEASUREMENT UNIT
MMT

PACKAGING VOLUME
3155625

PACKAGING VOLUME UNIT
MMQ

PACKAGING GROSS WEIGHT
0.783

PACKAGING NET WEIGHT
0.63

PACKAGING WEIGHT UNIT
KGM

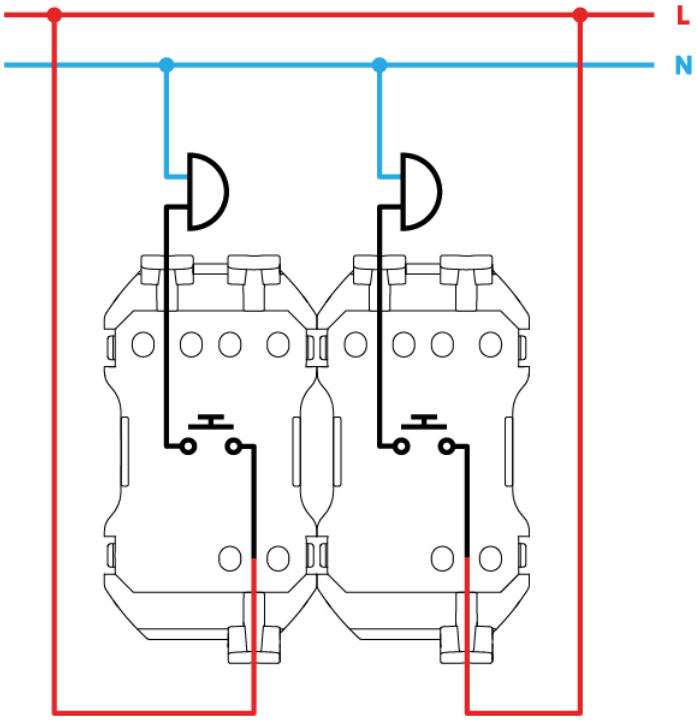
L
N

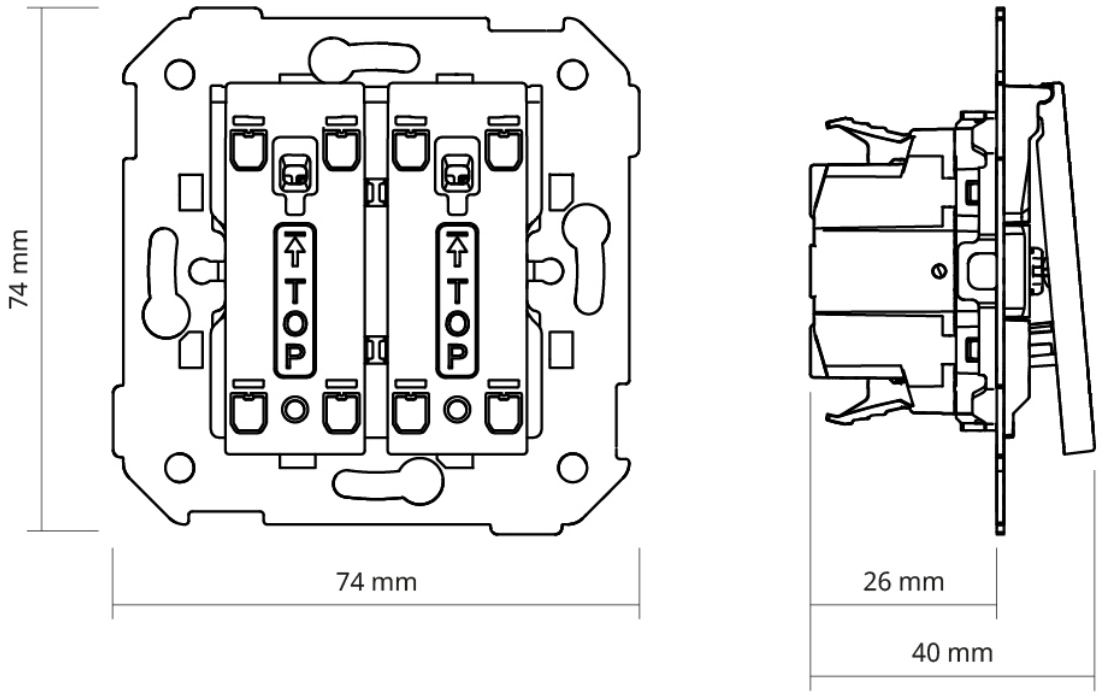
74 mm
TOP
TOP
74 mm
26 mm
40 mm