# Cover for USB C+C IP44 sand matte Simon 360

REF. **36002076-099**

## BASIC INFORMATION

### DESCRIPTION

Cover for USB C+C with protection IP44 in sand finish from the Simon 360 series. The matte finish, besides being trendy and integrating into any environment, prevents light reflections and reduces maintenance by minimizing stains and fingerprints. Smooth and high-quality touch that provides a sensation of sophistication to the product in all colors of the series. Urea is the main material and it boasts high resistance and durability, ensuring a prolonged lifespan. Cover designed for installation on Simon 75 mechanisms.

### FINISH

Sand

### MATERIAL

Thermostable,Steel

### SYMBOL

IP44

### ETIM CLASS

EC000011

### REMARKS

Available in 3 matte finishes s360. Frame available in the same colour as the selected interior to create a monochrome set or a two-tone combination.

## TECHNICAL INFORMATION

### AVAILABLE MARKET
CE

### FORMAT
USB C

### INDICATOR FUNCTION
No

### IP RATING
IP44

### MAINTENANCE
Clean with a soft, dry cloth. Do not use abrasive cloths or cleaning products that contain chlorine.

### OPERATING TEMPERATURE RANGE (ºC)
+5...+40

### RAL
7044

### STORAGE TEMPERATURE RANGE (ºC)
-25...+50

## INSTALLATION AND MAINTENANCE

### REMOVAL OF COVER
Only with tool

### INSTALLATION DIRECTION
Horizontal, Vertical

## LOGISTICS INFORMATION

UNITARY EAN CODE
8421053463451

UNITARY PACKAGING HEIGHT
0

UNITARY PACKAGING WIDTH
0

UNITARY PACKAGING LENGTH
0

UNITARY PACKAGING VOLUME
0

UNITARY PACKAGING GROSS WEIGHT
0

PRODUCT NET WEIGHT
0

UNITARY PACKAGING WEIGHT UNIT
KGM

PACKAGING EAN
8421053453292

UNITS CONTAINED PACKAGING
5

PACKAGING HEIGHT
90

PACKAGING WIDTH
80

PACKAGING LENGTH
80

PACKAGING MEASUREMENT UNIT
MMT

PACKAGING VOLUME
576000

PACKAGING VOLUME UNIT
MMQ

PACKAGING GROSS WEIGHT
0.12

PACKAGING NET WEIGHT
0

PACKAGING WEIGHT UNIT
KGM

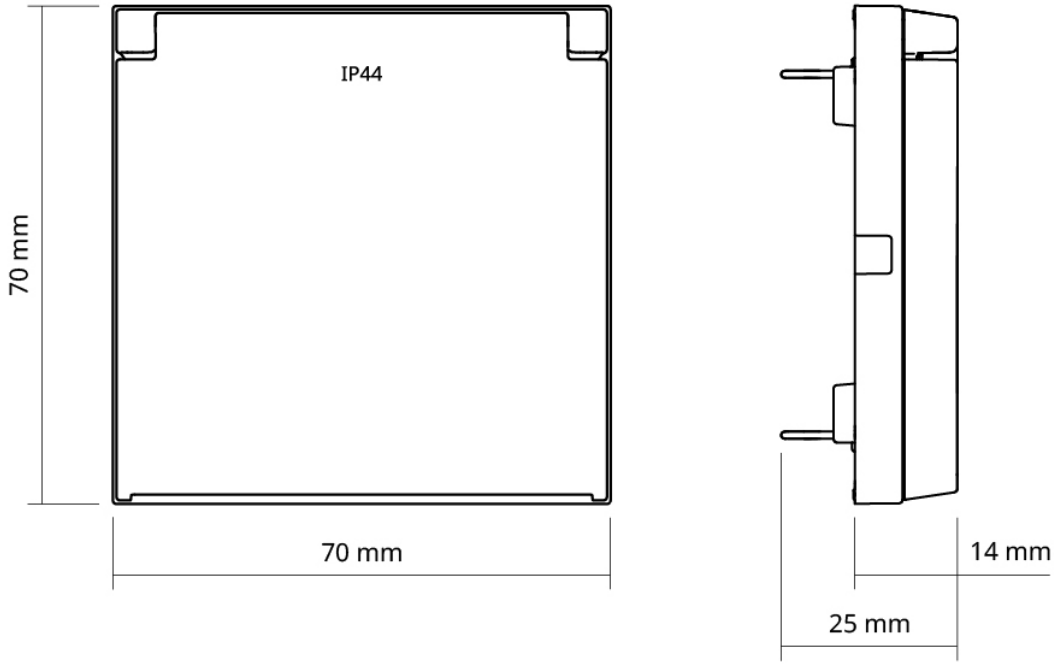
IP44
70 mm
70 mm
14 mm
25 mm

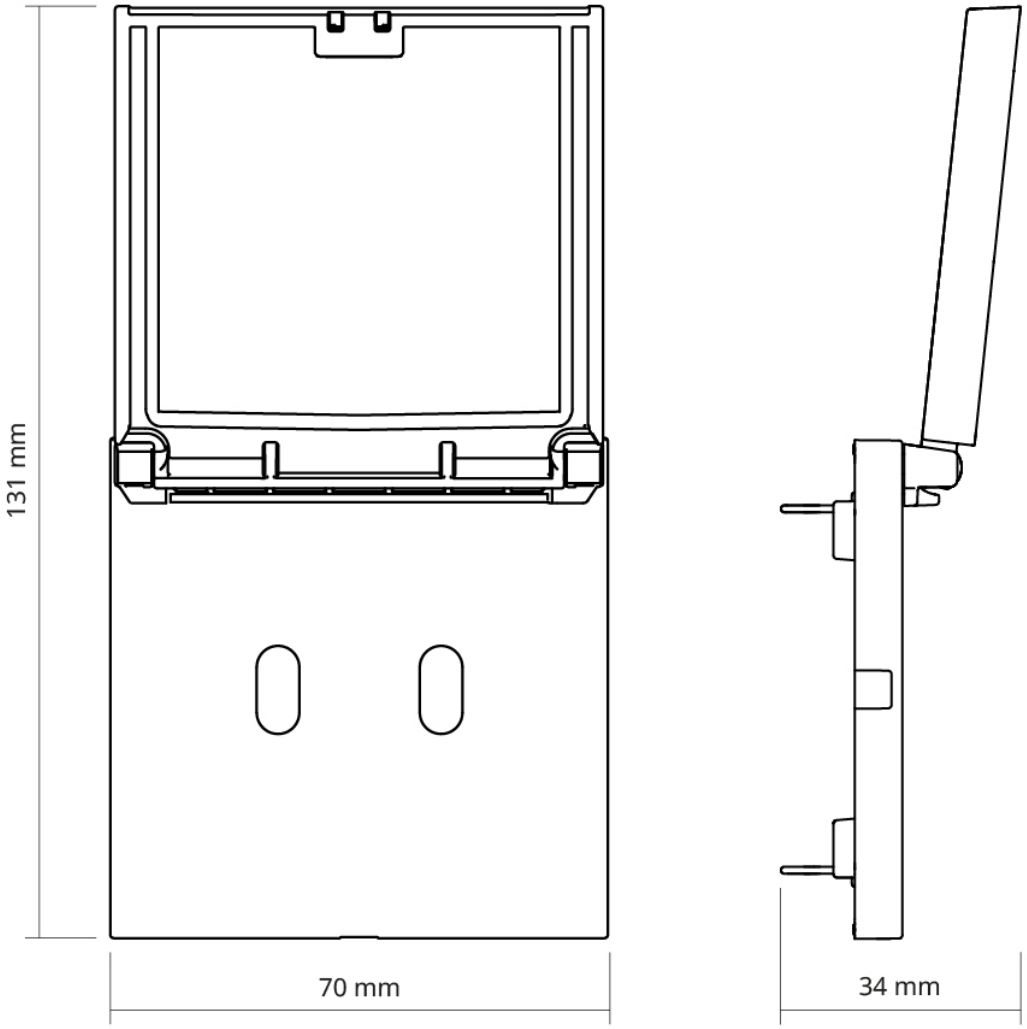
131 mm
70 mm
34 mm