Square shallow floor box for 4 elements in concrete or raised floor grey Simon 500 Cima

REF. **52050202-035**

BASIC INFORMATION

DESCRIPTION

The square floor box of the range of Simon 500 in grey colour, it is specially designed for installation in garden a low depth. It is valid for both concrete floors and for raised garden, that is slightly high on the concrete socket. With dimensions of 252 x 180 millimetres and 69 millimetres of depth, the square floor box Simon 500 can be supplied electrical power to a total of 4 elements. If you choose to install by recessing in concrete floor, you have to complete the installation with a plastic tray (ref.G201). It is also possible to accompany a trim cover (Ref. 52053202-035), if it is not installed in the same lining. This box has the added value of being composed of high quality materials based on the thermoplastic self-extruding, you also reduce the flame spread in case of fire a possible due to the room where it is. This same, has the capacity to reduce the toxicity of smoke.

FINISH

Grey

MATERIAL

Plastic

COMPATIBILITY

Simon 500 Cima and Simon 27 Play/Simon K45 mechanisms (using a specific adaptor)

PACKAGING CONTENTS

Floor box and installation manual

ETIM CLASS

EC000024

REMARKS

To complete the installation of the product in concrete floors, once configured, it must be combined with a plastic tray (ref.G201). Alternatively, it may be combined with flush-mount trim cover (ref.52053202-035) in cases where the same floor lining is not installed.

simon

TECHNICAL INFORMATION

AVAILABLE MARKET
CE

PROTECTION AGAINST DIRECT ACCESS OF CONTACTS
No

PROTECTION AGAINST ENTRY OF DUST AND SMALL OBJECTS
Yes, thanks to the inclusion of ductile plastic wire outputs

AVAILABLE IN
4, 6 and 8 elements

NUMBER OF CLAMP-HOLDER HOLES
4

DIELECTRIC STRENGTH
No holes or contours, with 2000V at 50 Hz for 1 minute

MAX TEMP DURING CONSTRUCTION WORK (ºC)
+90 ºC

HEAT RESISTANCE (ºC)
+125ºC (according rule IEC 60695-10-2)

IK CLASSIFICATION
08

INSULATION RESISTANCE (V-MΩ)
>5 MOhms at 500V

IP RATING
IP4X

KIT AVAILABILITY
Yes

MAINTENANCE
Clean with a soft, dry cloth. Do not use abrasive cloths or cleaning products that contain chlorine.

TEMPERATURE RANGE DURING INSTALLATION (ºC)
-5 to 60 ºC

NUMBER OF MODULES
4 modules

NUMBER OF PRE-PUNCHED HOLES 55 X 20 MM
4

RAL
7011

RECESS DIMENSION (MM)
250 x 178 mm

NUMBER OF SIDE ENTRANCES
4

VERSION
4 elements

INSTALLATION AND MAINTENANCE

CLAW RANGE OF OPERATION (MM)
Between 11 and 48 mm

REMOVAL OF COMPONENTS
Only with tool

NUMBER OF COVER OPENING POSITIONS
2

EXTINGUISHING (ºC)
+850 ºC / 30 seconds (GWFI in accordance with standard IEC 60695-2-11)

TYPE OF FASTENING
Using fastening claws on the concrete floor tray or on the raised floor tile (supplied with the floor box)

CAN BE INSTALLED IN TRAY
Plástica

INSTALLATION DIRECTION
Horizontal, Vertical

INSTALLATION TYPE
Its design for shallow floors allows it to be installed in any type of raised or concrete floor, combining the latter installation type with tray ref. 4120

REGULATIONS

REGULATIONS
Directive 2014/35/UE LVD + EN 60670-23:2008

LOGISTICS INFORMATION

UNITARY EAN CODE
8421053093184

UNITARY PACKAGING HEIGHT
0

UNITARY PACKAGING WIDTH
0

UNITARY PACKAGING LENGTH
0

UNITARY PACKAGING VOLUME
0

UNITARY PACKAGING GROSS WEIGHT
1.25

PRODUCT NET WEIGHT
1.25

UNITARY PACKAGING WEIGHT UNIT
KGM

PACKAGING EAN
8421053093184

UNITS CONTAINED PACKAGING
1

PACKAGING HEIGHT
80

PACKAGING WIDTH
210

PACKAGING LENGTH
280

PACKAGING MEASUREMENT UNIT
MMT

PACKAGING VOLUME
4704000

PACKAGING VOLUME UNIT
MMQ

PACKAGING GROSS WEIGHT
0

PACKAGING NET WEIGHT
1.25

PACKAGING WEIGHT UNIT
KGM

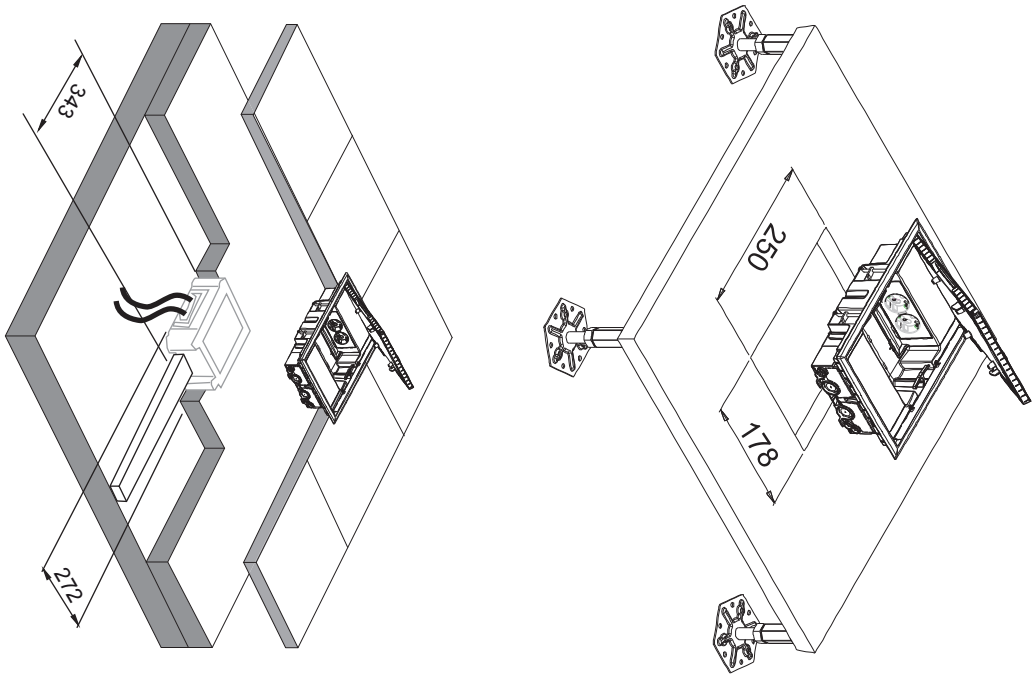
343
272
250
178

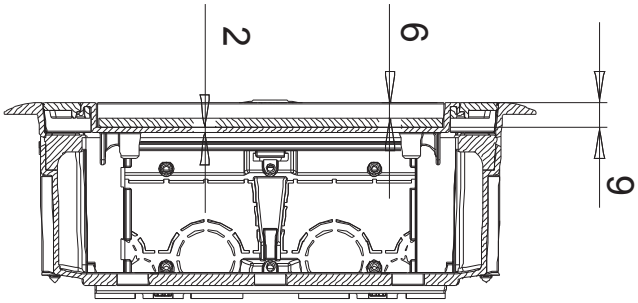
2
6
9

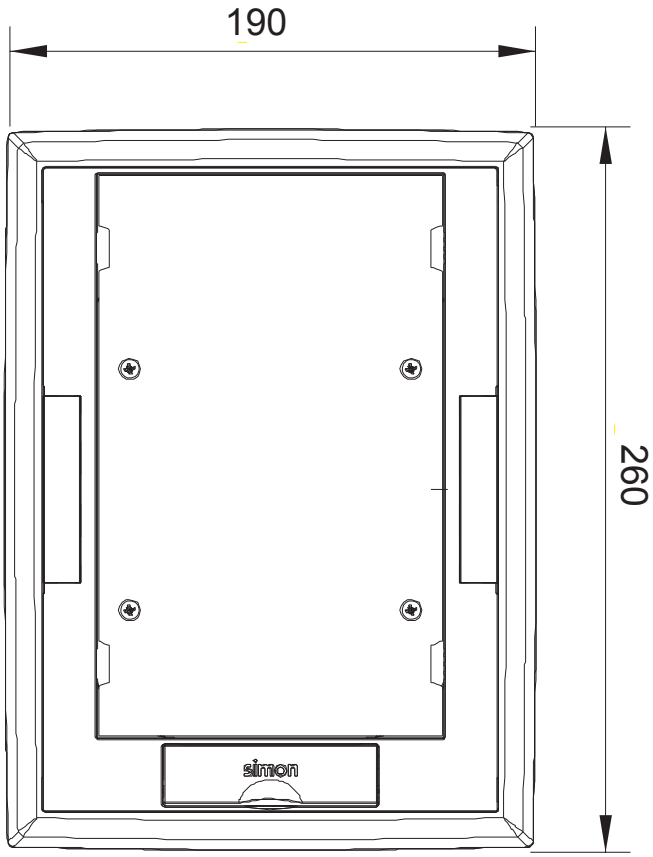
190
260
simon