SC/APC Duplex Fiber Optic Connector Simon 75

REF. **7500546-039**

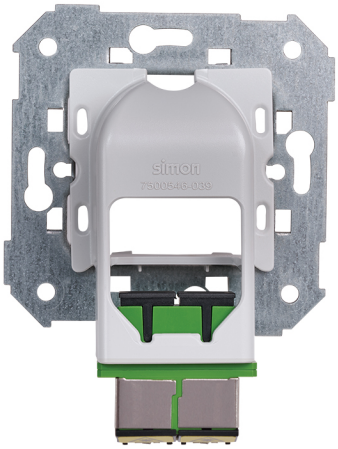

BASIC INFORMATION

DESCRIPTION

The SC/APC duplex fiber optic connector Simon 75 is the ideal solution for telecommunications installations and FTTH networks that require maximum accuracy and low signal loss. Designed for SC/APC type fiber optic connections, this duplex connector allows the termination of two fibers in a single mechanism, optimizing space and organization in residential and professional installations. It integrates perfectly into frames and mechanisms of the range, offering an aesthetic and functional solution for voice and data networks. Its 1 double element format allows for flush or surface installation in a universal box, facilitating adaptation to housing projects, offices, hotels, or commercial spaces that require a secure, stable fiber optic connection, ready for high-speed services such as internet, television, and digital communications.

MATERIAL

Plastic,Metal

COMPATIBILITY

Marcos Simon 27, Simon 31, Simon 75, Simon 82 Concept, Simon 82 Detail, Simon 82 Nature and Simon 82.

ETIM CLASS

EC001409

TECHNICAL INFORMATION

NUMBER OF CONNECTORS
2

FORMAT
Optical fiber

RECESS DIMENSION (MM)
50

CONNECTOR TYPE
Optical fiber

LINKABLE
No

INSTALLATION AND MAINTENANCE

CLAW
Simon 27

INSTALLATION DIRECTION
Horizontal, Vertical

TYPE OF TERMINAL CONNECTION - FUNCTION 1
Conector

REMOVAL OF COVER
Only with tool

LOGISTICS INFORMATION

UNITARY EAN CODE
8421053234709

UNITARY PACKAGING HEIGHT
0

UNITARY PACKAGING WIDTH
0

UNITARY PACKAGING LENGTH
0

UNITARY PACKAGING VOLUME
0

UNITARY PACKAGING GROSS WEIGHT
0.064

PRODUCT NET WEIGHT
0.064

UNITARY PACKAGING WEIGHT UNIT
KGM

PACKAGING EAN
8421053234709

UNITS CONTAINED PACKAGING
1

PACKAGING HEIGHT
57

PACKAGING WIDTH
76

PACKAGING LENGTH
76

PACKAGING MEASUREMENT UNIT
MMT

PACKAGING VOLUME
329232

PACKAGING VOLUME UNIT
MMQ

PACKAGING GROSS WEIGHT
0.064

PACKAGING NET WEIGHT
0.064

PACKAGING WEIGHT UNIT
KGM

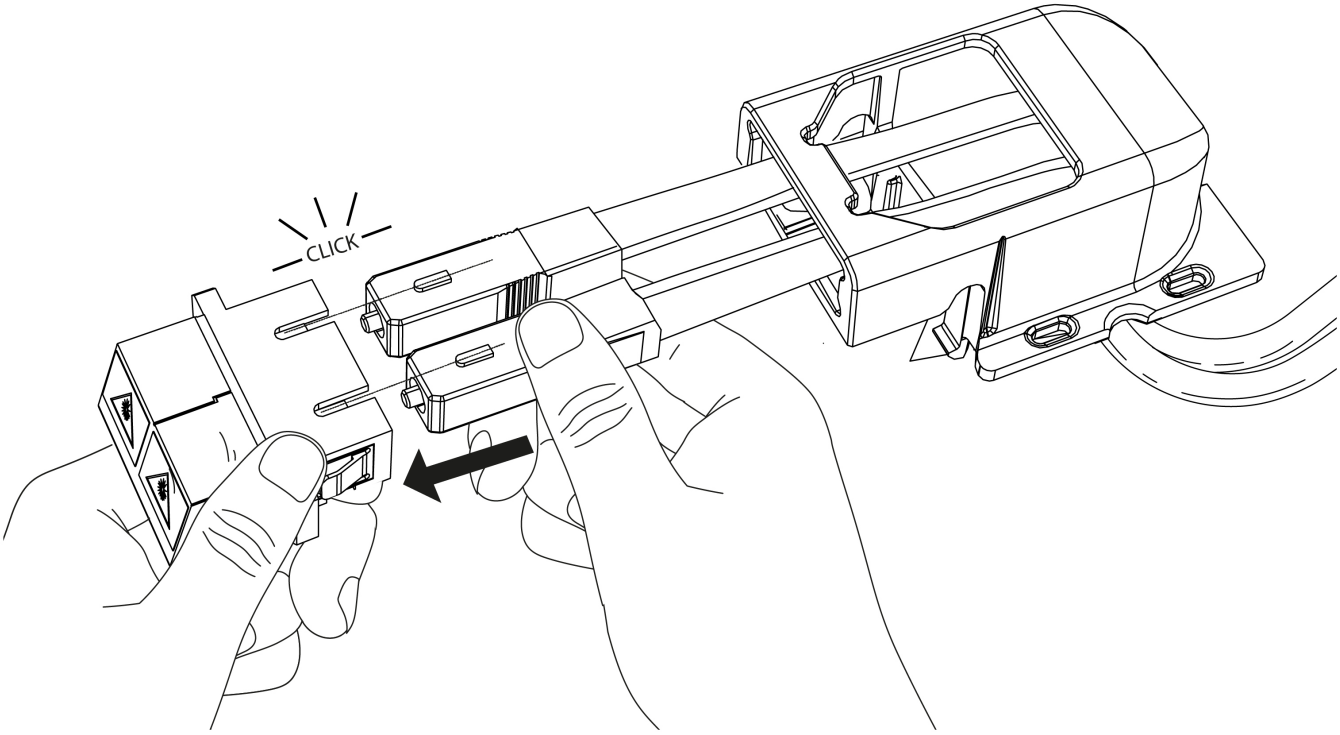

Para información más detallada consultar la hoja de instrucciones
For more detailed information check the instruction sheet

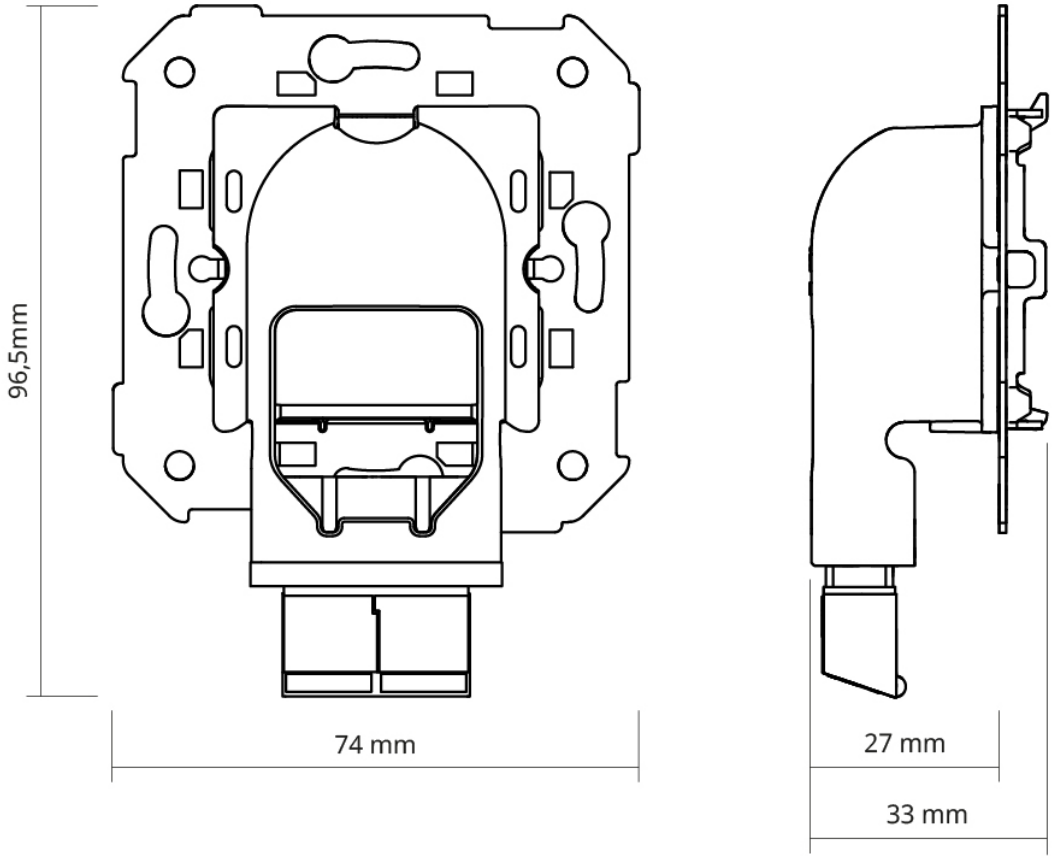
96,5mm
74 mm
27 mm
33 mm