USB charger of 1 module 2.1A 5V~ champagne Simon 82

REF. **8201097-064**

BASIC INFORMATION

FINISH
Champagne

COMPATIBILITY
Simon 82 Plates and Switches

TECHNICAL INFORMATION

INDICATOR FUNCTION
No

MAINTENANCE
Clean with a soft, dry cloth. Do not use abrasive cloths or cleaning products that contain chlorine.

USB CURRENT (A)
2,1 A

USB VOLTAGE (V~)
5 V~

INSTALLATION AND MAINTENANCE

CABLE STRIPPING NECESSARY (MM)
11

INSTALLATION DIRECTION
Horizontal, Vertical

TYPE OF TERMINAL CONNECTION - FUNCTION 1
Screw

LOGISTICS INFORMATION

UNITARY EAN CODE
8421053198896

UNITARY PACKAGING HEIGHT
23

UNITARY PACKAGING WIDTH
43.5

UNITARY PACKAGING LENGTH
54.8

UNITARY PACKAGING MEASUREMENT UNIT
MMT

UNITARY PACKAGING VOLUME
0.055

UNITARY PACKAGING VOLUME UNIT
DMQ

UNITARY PACKAGING GROSS WEIGHT
0.044

PRODUCT NET WEIGHT
0.036

UNITARY PACKAGING WEIGHT UNIT
KGM

PACKAGING EAN
8421053198896

UNITS CONTAINED PACKAGING
1

PACKAGING HEIGHT
55

PACKAGING WIDTH
65

PACKAGING LENGTH
65

PACKAGING MEASUREMENT UNIT
MMT

PACKAGING VOLUME
232375

PACKAGING VOLUME UNIT
MMQ

PACKAGING GROSS WEIGHT
0.054

PACKAGING NET WEIGHT
0.036

PACKAGING WEIGHT UNIT
KGM

VISTA FRONTAL E ISOMÉTRICA DEL PRODUCTO

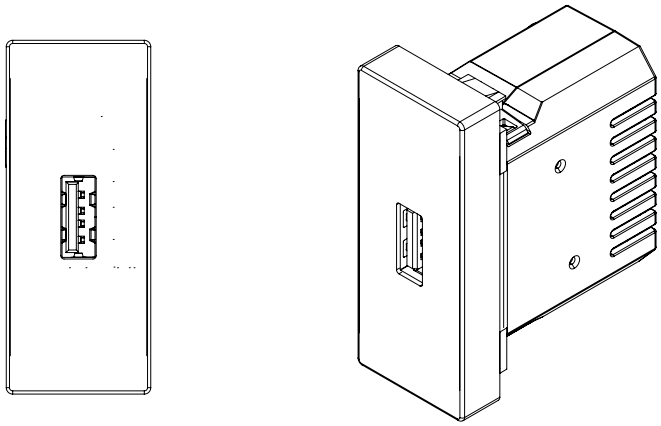

DIAGRAMA DE MONTAJE

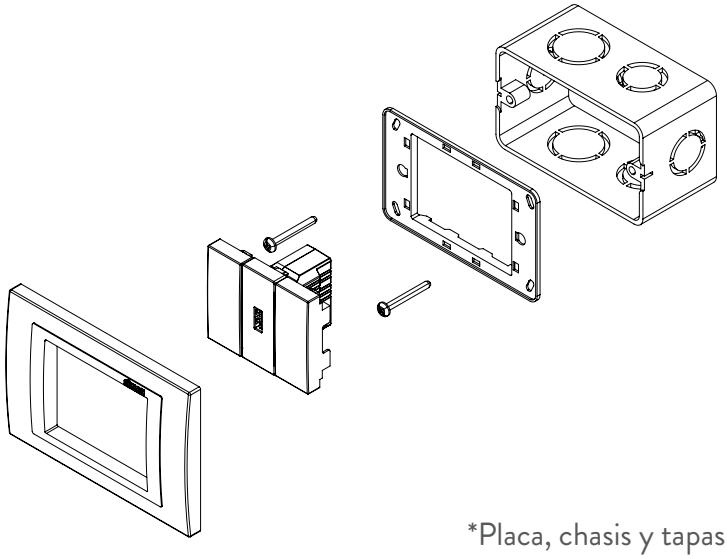

*Placa, chasis y tapas ciegas NO incluidos
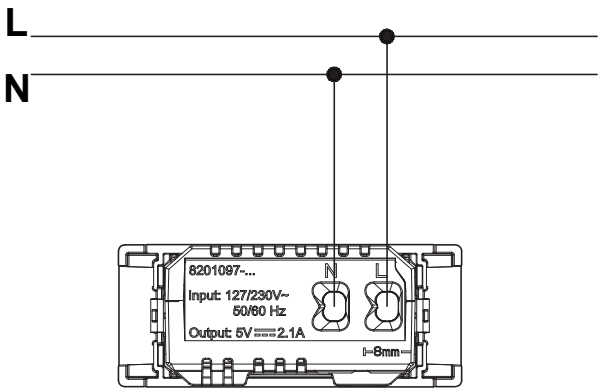
DIAGRAMA DE CONEXIÓN