Cover for bipolar socket base sand matte Simon 360

REF. **36000040-099**

BASIC INFORMATION

DESCRIPTION

Cover for bipolar socket base in sand finish from the Simon 360 series. The matte finish, in addition to being a trend and blending into any environment, prevents light reflections and reduces maintenance by minimizing stains and fingerprints. Soft and high-quality touch that brings a sense of sophisticated product in all colors of the series. Urea is the main material and has high resistance and durability, ensuring a prolonged lifespan. Cover designed for installation in Simon 75 mechanisms.

FINISH

Sand

COMPATIBILITY

Mecanismos Simon 75

MATERIAL

Steel,Thermostable

ETIM CLASS

EC000011

REMARKS

Available in 3 matte finishes s360. Frame available in the same color as the selected interior to create a single-color set or the possibility of a bicolor set. For cleaning, it is recommended to use a cloth slightly dampened with soapy water, avoiding the use of abrasive cloths or cleaners containing chlorine, to prevent damage to the product's surface.

TECHNICAL INFORMATION

FORMAT
Two-pole

IP RATING
IP20

RAL
7044

INDICATOR FUNCTION
No

MAINTENANCE
Clean with a soft, dry cloth. Do not use abrasive cloths or cleaning products that contain chlorine.

INSTALLATION AND MAINTENANCE

REMOVAL OF COVER
Only with tool

INSTALLATION DIRECTION
Horizontal, Vertical

LOGISTICS INFORMATION

UNITARY EAN CODE
8421053439326

UNITARY PACKAGING HEIGHT
0

UNITARY PACKAGING WIDTH
0

UNITARY PACKAGING LENGTH
0

UNITARY PACKAGING MEASUREMENT UNIT
MMT

UNITARY PACKAGING VOLUME
0

UNITARY PACKAGING VOLUME UNIT
MMQ

UNITARY PACKAGING GROSS WEIGHT
0.033

PRODUCT NET WEIGHT
0.028

UNITARY PACKAGING WEIGHT UNIT
KGM

PACKAGING EAN
8421053434475

UNITS CONTAINED PACKAGING
10

PACKAGING HEIGHT
86

PACKAGING WIDTH
165

PACKAGING LENGTH
220

PACKAGING MEASUREMENT UNIT
MMT

PACKAGING VOLUME
3121800

PACKAGING VOLUME UNIT
MMQ

PACKAGING GROSS WEIGHT
0.432

PACKAGING NET WEIGHT
0.28

PACKAGING WEIGHT UNIT
KGM

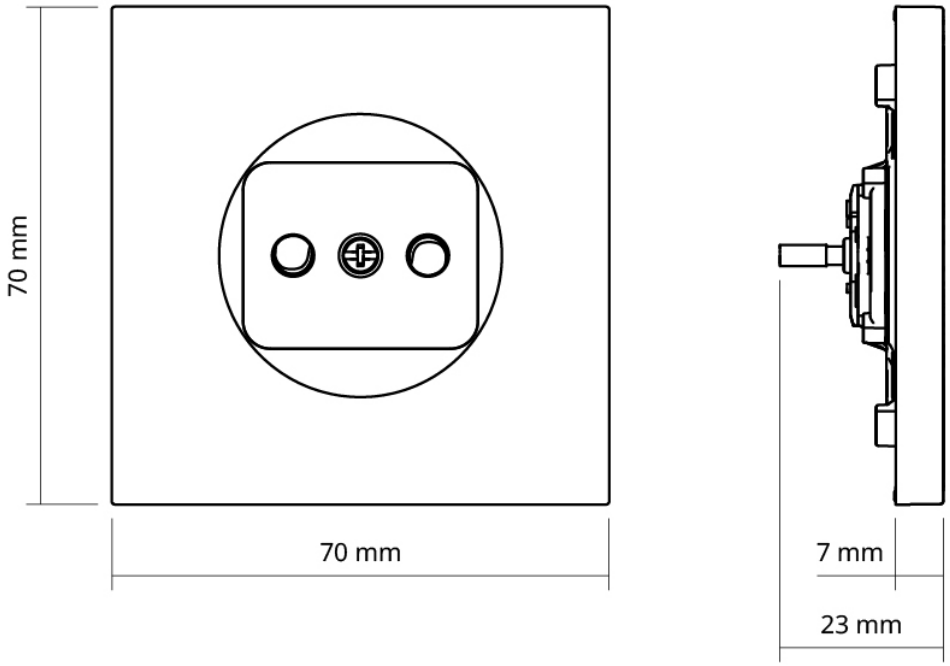
70 mm
70 mm
7 mm
23 mm