Modular R-TV+SAT signal socket final Simon 75

REF. **75468-69**

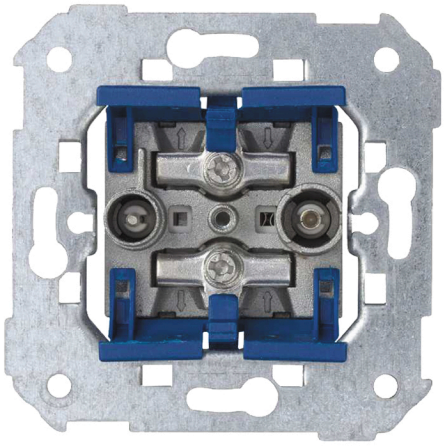

BASIC INFORMATION

DESCRIPTION

Modular R-TV+SAT signal socket Simon 75, designed as a termination point for the distribution of radio, terrestrial television (TDT), and satellite signal in individual installations. A modular solution that guarantees transmission quality and compatibility with current reception systems. Based on 9.5 mm Ø IEC connectors, it incorporates a terminal connection screw system that allows for quick, secure, and professional connection. It accepts coaxial cable from 6 to 8 mm with stripping of 8 mm for precise and stable installation. Made with metallic components and halogen-free thermoplastic insulation, in accordance with the EN 50083-2:2013 standard, it offers safety, durability, and reliable performance within the Simon 75 series and compatible frames.

MATERIAL

Plastic,Metal

COMPATIBILITY

Marcos Simon 27 Play, Simon 27 Scudo, Simon 27, Simon 31, Simon 44 Aqua, Simon 75, Simon 82 Detail, Simon 82 Nature, Simon 82 Concept and Simon 82.

PACKAGING CONTENTS

R/TV+SAT socket and instruction sheet

ETIM CLASS

EC000439

simon

TECHNICAL INFORMATION

AVAILABLE MARKET
CE

CABLE SECTION ADMITTED (MM)
From 6 to 8 mm

NUMBER OF CONNECTORS
2

CONNECTOR TYPE
IEC

NUMBER OF CONTACTS
1

NUMBER OF POSSIBLE ELEMENTS
1 element

FORMAT
R/TV,SAT

IP RATING
IP20

LINKABLE
No

TYPE OF MECHANISM
Insertion

OPERATING TEMPERATURE RANGE (ºC)
5 - 40 ºC

RECESS DIMENSION (MM)
35

STORAGE TEMPERATURE RANGE (ºC)
-25 - 50 ºC

VERSION
Single

NUMBER OF WIRES
1

INSTALLATION AND MAINTENANCE

CABLE STRIPPING NECESSARY (MM)
8

CLAW
Simon 27

REMOVAL OF COVER
Only with tool

INSTALLABLE IN FLUSH MOUNT JUNCTION BOX
Universal

INSTALLATION DIRECTION
Horizontal, Vertical

INSTALLATION TYPE
Suitable for surface and flush mounting

TYPE OF TERMINAL CONNECTION - FUNCTION 1
Screw

REGULATIONS

REGULATIONS
Dir. 2014/30/UE EMC|Dir. 2011/65/UE RoHS + post. mod.|EN 50083-2:2012|EN 50083-2:2012 A1:2015|EN IEC 63000:2018

LOGISTICS INFORMATION

UNITARY EAN CODE
8421053256206

UNITARY PACKAGING HEIGHT
0

UNITARY PACKAGING WIDTH
0

UNITARY PACKAGING LENGTH
0

UNITARY PACKAGING MEASUREMENT UNIT
MMT

UNITARY PACKAGING VOLUME
0

UNITARY PACKAGING VOLUME UNIT
MMQ

UNITARY PACKAGING GROSS WEIGHT
0.114

PRODUCT NET WEIGHT
0.114

UNITARY PACKAGING WEIGHT UNIT
KGM

PACKAGING EAN
8421053060407

UNITS CONTAINED PACKAGING
10

PACKAGING HEIGHT
82

PACKAGING WIDTH
165

PACKAGING LENGTH
223

PACKAGING MEASUREMENT UNIT
MMT

PACKAGING VOLUME
3017190

PACKAGING VOLUME UNIT
MMQ

PACKAGING GROSS WEIGHT
0

PACKAGING NET WEIGHT
1.14

PACKAGING WEIGHT UNIT
KGM

INTERMEDIA

75487-39
75467-69

FINAL

75488-39
75468-69

UNICA

7500470-039
75486-39
75466-69

En Serie/Cascada

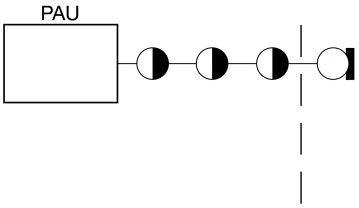

En Estrella

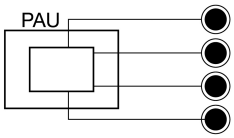

1

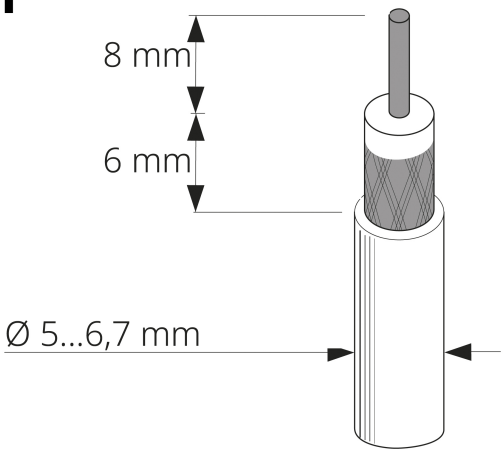

2

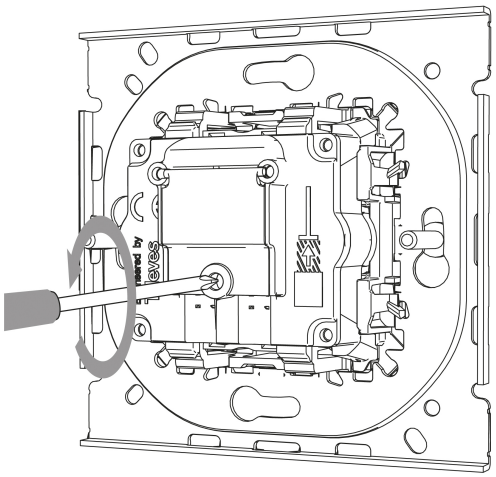

3

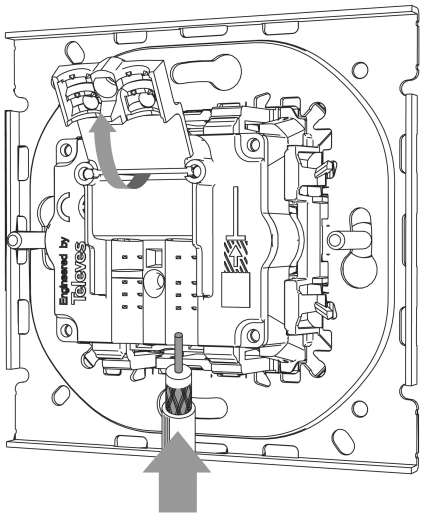

4

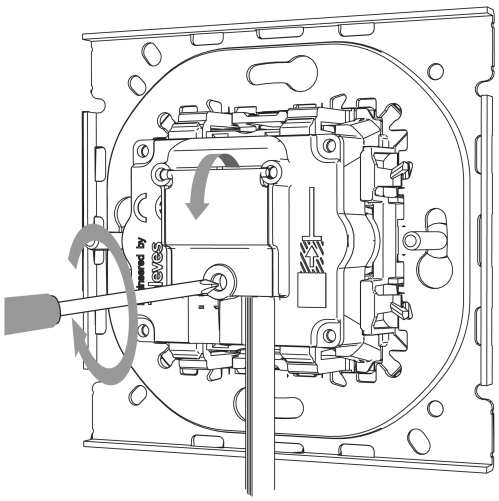

Para información más detallada consultar la hoja de instrucciones
For more detailed information check the instruction sheet

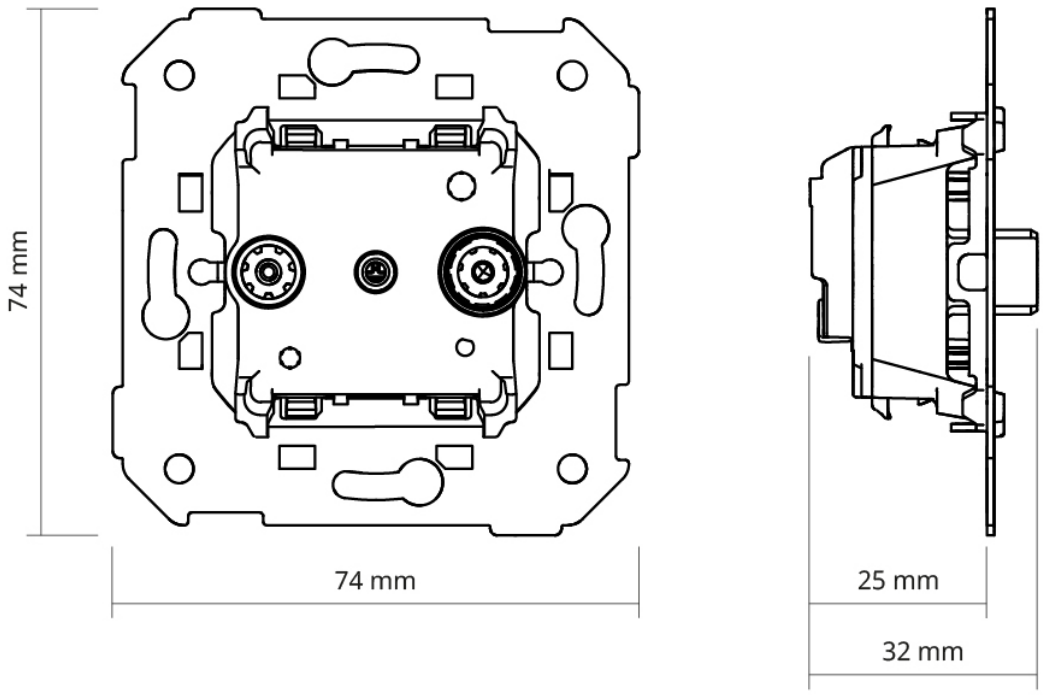
74 mm
74 mm
25 mm
32 mm