Unipolar switch 10 AX 250V~ with quick terminal connection system Simon 75

REF. **75101-39**

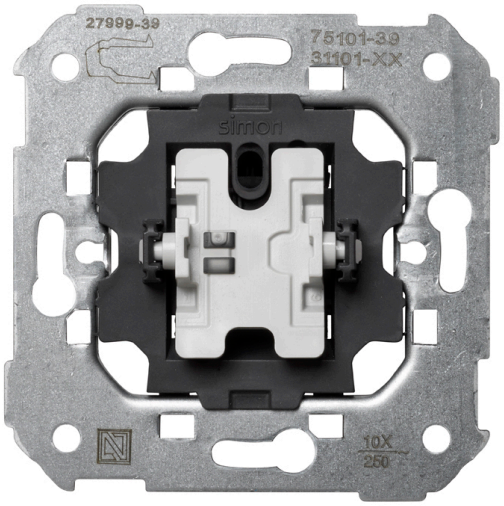

BASIC INFORMATION

DESCRIPTION

1 unipolar switch of 10 AX and 250V~ with quick terminal connection system and rocking operation, compatible and belonging to the Simon 75 brand. It offers the possibility of implementing a signaling function through a signaling support and key with viewer. For installation, it will be sufficient to press or place it on the surface, the accepted cable section is from 1.5 to 2.5 mm and it includes 11 mm of stripped cable. The material is made of metal components with halogen-free thermoplastic insulation, able to oscillate between 5 and 40º, and capable of withstanding a maximum temperature range of -25 to 50º C, this item fully complies with the UNE-EN 60669-1:2002 + A1:2003 + A2:2009 standard.

MATERIAL

Plastic,Metal

COMPATIBILITY

Marcos Simon 75, Simon 82 Detail, Simon 82 Nature, Simon 82 Concept and Simon 82

PACKAGING CONTENTS

Mechanism

ETIM CLASS

EC001590

TECHNICAL INFORMATION

AVAILABLE MARKET
CE

CABLE SECTION ADMITTED (MM)
From 1,5 to 2,5 mm

NUMBER OF CONTACTS
2

NUMBER OF POSSIBLE ELEMENTS
1 element

FREQUENCY
50 Hz

INDICATOR FUNCTION
No

CURRENT (A)
10 AX

IP RATING
IP21

LINKABLE
No

TYPE OF MECHANISM
Pivoting

MONOBLOCK
No

NOMINAL VOLTAGE (V~)
230 V~

OPERATING TEMPERATURE RANGE (°C)
5 - 40 °C

RECESS DIMENSION (MM)
40

STORAGE TEMPERATURE RANGE (°C)
-25 - 50 °C

VERSION
Single

VOLTAGE (V~)
250 V~

NUMBER OF WIRES
2

INSTALLATION AND MAINTENANCE

CABLE STRIPPING NECESSARY (MM)
15

CLAW
Simon 27

REMOVAL OF COVER
Only with tool

INSTALLABLE IN FLUSH MOUNT JUNCTION BOX
Universal

INSTALLATION TYPE
Suitable for surface and flush mounting

TYPE OF TERMINAL CONNECTION - FUNCTION 1
Fast

REGULATIONS

REGULATIONS
Dir. 2014/35/UE LVD | Dir. 2011/65/UE RoHS + post. mod. | EN 60669-1:2018 | EN IEC 63000:2018

LOGISTICS INFORMATION

UNITARY EAN CODE
8421053255735

UNITARY PACKAGING HEIGHT
0

UNITARY PACKAGING WIDTH
0

UNITARY PACKAGING LENGTH
0

UNITARY PACKAGING MEASUREMENT UNIT
MMT

UNITARY PACKAGING VOLUME
0

UNITARY PACKAGING VOLUME UNIT
MMQ

UNITARY PACKAGING GROSS WEIGHT
0.058

PRODUCT NET WEIGHT
0.058

UNITARY PACKAGING WEIGHT UNIT
KGM

PACKAGING EAN
8421053003510

UNITS CONTAINED PACKAGING
10

PACKAGING HEIGHT
83

PACKAGING WIDTH
165

PACKAGING LENGTH
221

PACKAGING MEASUREMENT UNIT
MMT

PACKAGING VOLUME
3026595

PACKAGING VOLUME UNIT
MMQ

PACKAGING GROSS WEIGHT
0.565

PACKAGING NET WEIGHT
0.58

PACKAGING WEIGHT UNIT
KGM

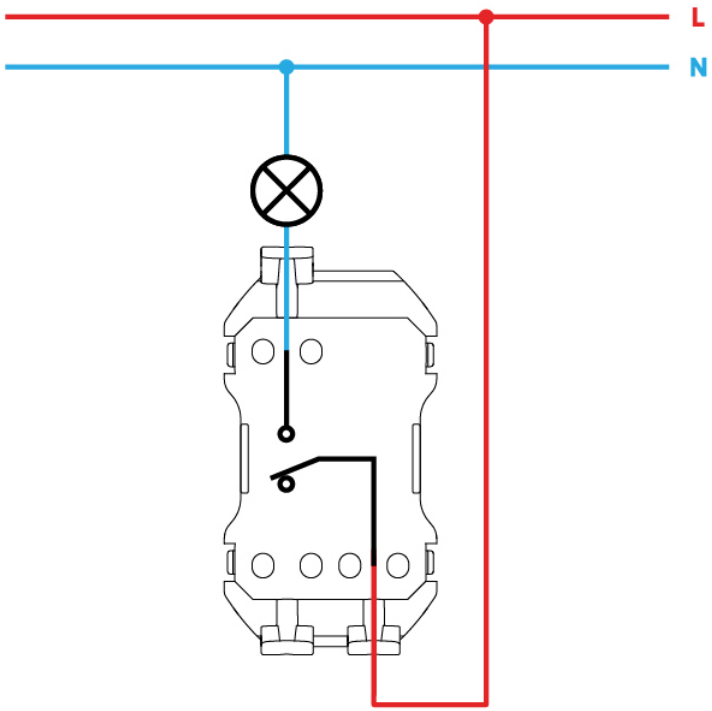
L
N

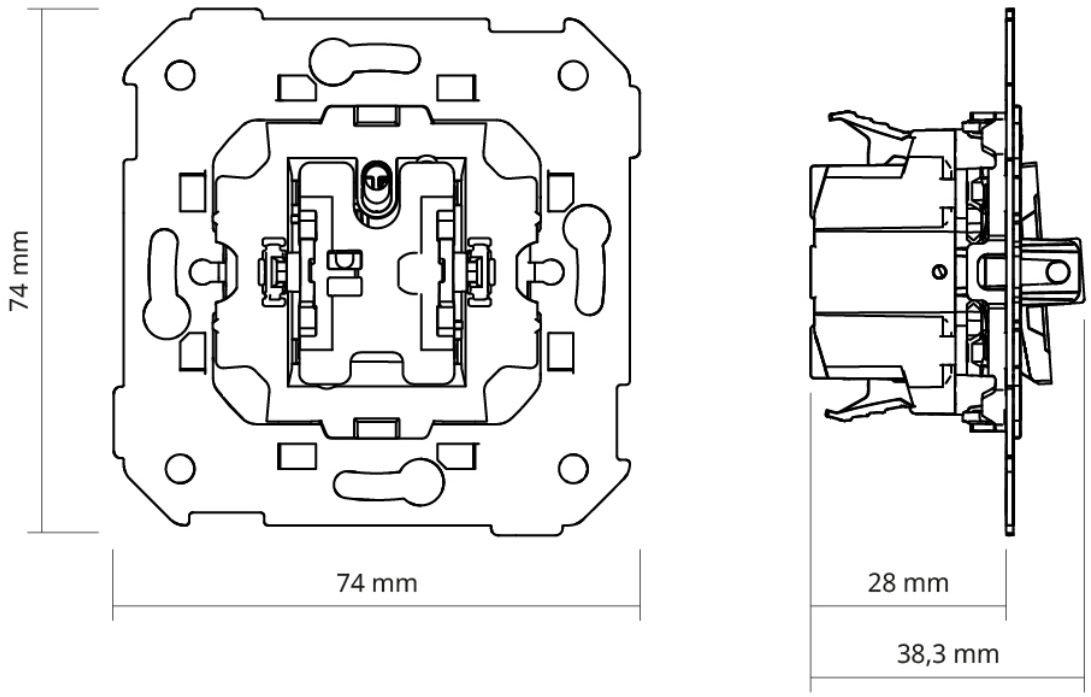
74 mm
74 mm
28 mm
38,3 mm