Blinds switch LOLA 230 V~ Simon 75

REF. **7510333-039**

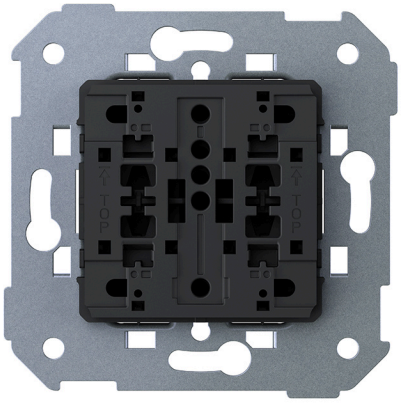

BASIC INFORMATION

DESCRIPTION

LADY shutter switch 230 V~ from the Simon 75 series. Wifi protocol. Lola is Simon's digital ecosystem for the comprehensive management of homes, buildings, and cities, allowing complete control of the spaces.

MATERIAL

FR4,Steel,Plastic

COMPATIBILITY

Molduras Simon 360

ETIM CLASS

EC000044

REMARKS

Operation requires connection to the HUB MINI and the presence of a neutral wire in the electrical installation to ensure proper communication and power supply of the system.

TECHNICAL INFORMATION

FREQUENCY
50 - 60 Hz

IP RATING
IP20

RECESS DIMENSION (MM)
40

INDICATOR FUNCTION
Yes

LINKABLE
Yes

VOLTAGE (V~)
127/230 V~

NUMBER OF SWITCHES
2

POWER SUPPLY (V~)
127/230 V~

INSTALLATION AND MAINTENANCE

CABLE STRIPPING NECESSARY (MM)
7

CLAW
Not possible

REMOVAL OF COVER
Only with tool

INSTALLATION DIRECTION
Horizontal, Vertical

TYPE OF TERMINAL CONNECTION - FUNCTION 1
Screw

REGULATIONS

REGULATIONS
Dir. 2014/53/UE RED*1 | Dir. 2014/35/UE LVD | Dir. 2011/65/UE RoHS + post. mod. | EN 50428:2005 + A1:2007 + A2:2009*1 | EN 60669-1:2018 | ETSI EN 300328 V2.2.2*1 EN IEC 63000:201 | EN IEC 63000:201

LOGISTICS INFORMATION

UNITARY EAN CODE
8421053438800

UNITARY PACKAGING HEIGHT
0

UNITARY PACKAGING WIDTH
0

UNITARY PACKAGING LENGTH
0

UNITARY PACKAGING VOLUME
0

UNITARY PACKAGING GROSS WEIGHT
0.08

PRODUCT NET WEIGHT
0.058

UNITARY PACKAGING WEIGHT UNIT
KGM

PACKAGING EAN
8421053438800

UNITS CONTAINED PACKAGING
1

PACKAGING HEIGHT
57

PACKAGING WIDTH
76

PACKAGING LENGTH
76

PACKAGING MEASUREMENT UNIT
MMT

PACKAGING VOLUME
329232

PACKAGING VOLUME UNIT
MMQ

PACKAGING GROSS WEIGHT
0.18

PACKAGING NET WEIGHT
0.058

PACKAGING WEIGHT UNIT
KGM

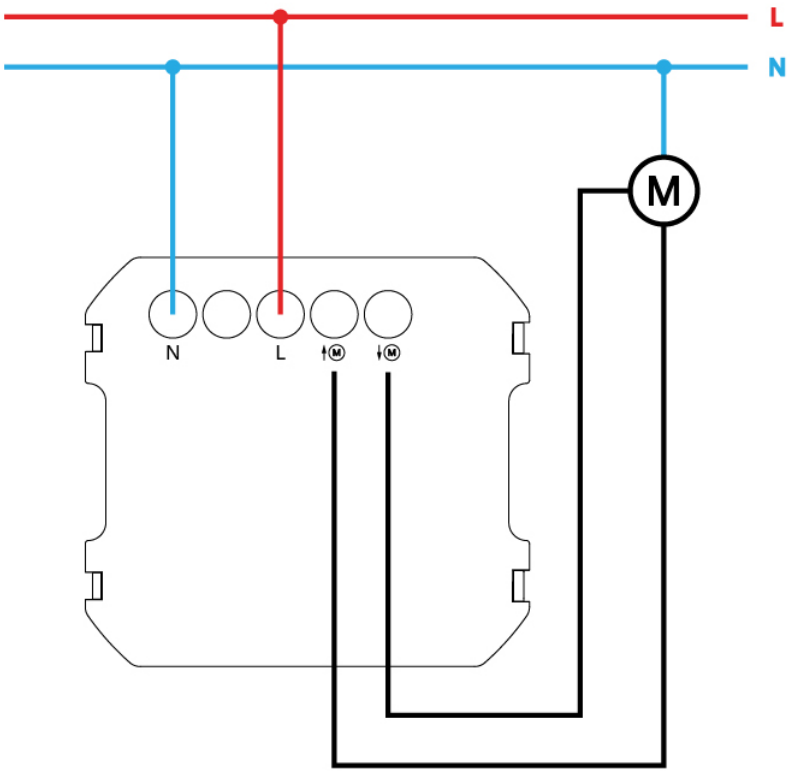
L
N
M
N
L

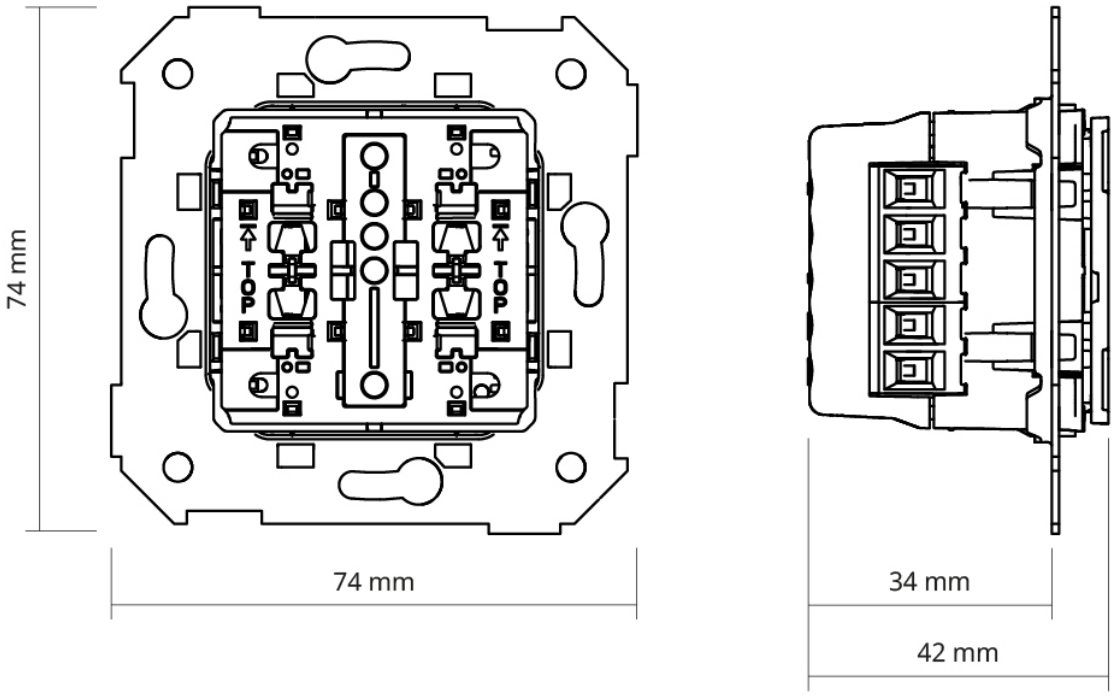
74 mm
TOP
TOP
74 mm
34 mm
42 mm