Coaxial TV Socket 1 Module Graphite Simon 82

REF. **82476-68**

BASIC INFORMATION

FINISH
Graphite

TECHNICAL INFORMATION

CABLE SECTION ADMITTED (MM)
3,3 mm

CONNECTOR TYPE
TV

FORMAT
TV

MAINTENANCE
Clean with a soft, dry cloth. Do not use abrasive cloths or cleaning products that contain chlorine.

INSTALLATION AND MAINTENANCE

CABLE STRIPPING NECESSARY (MM)
11

TYPE OF TERMINAL CONNECTION - FUNCTION 1
Screw

LOGISTICS INFORMATION

UNITARY EAN CODE
7506020305482

UNITARY PACKAGING HEIGHT
22.5

UNITARY PACKAGING WIDTH
27.5

UNITARY PACKAGING LENGTH
54.5

UNITARY PACKAGING MEASUREMENT UNIT
MMT

UNITARY PACKAGING VOLUME
0.034

UNITARY PACKAGING VOLUME UNIT
DMQ

UNITARY PACKAGING GROSS WEIGHT
16

PRODUCT NET WEIGHT
7.08

UNITARY PACKAGING WEIGHT UNIT
GRM

PACKAGING EAN
7506020309572

UNITS CONTAINED PACKAGING
5

PACKAGING HEIGHT
59

PACKAGING WIDTH
76

PACKAGING LENGTH
76

PACKAGING MEASUREMENT UNIT
MMT

PACKAGING VOLUME
0.341

PACKAGING VOLUME UNIT
DMQ

PACKAGING GROSS WEIGHT
0.08

PACKAGING NET WEIGHT
35.4

PACKAGING WEIGHT UNIT
KGM

VISTA FRONTAL E ISOMÉTRICA DEL PRODUCTO

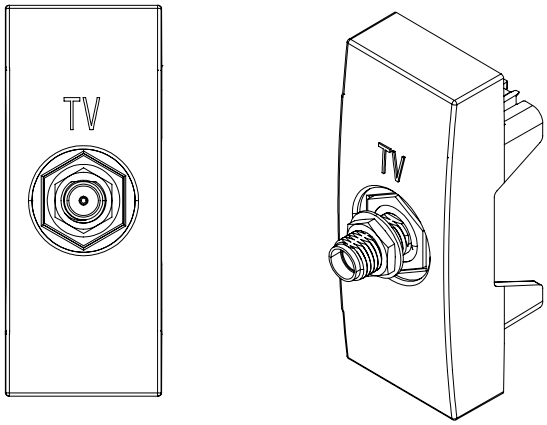

DIAGRAMA DE MONTAJE

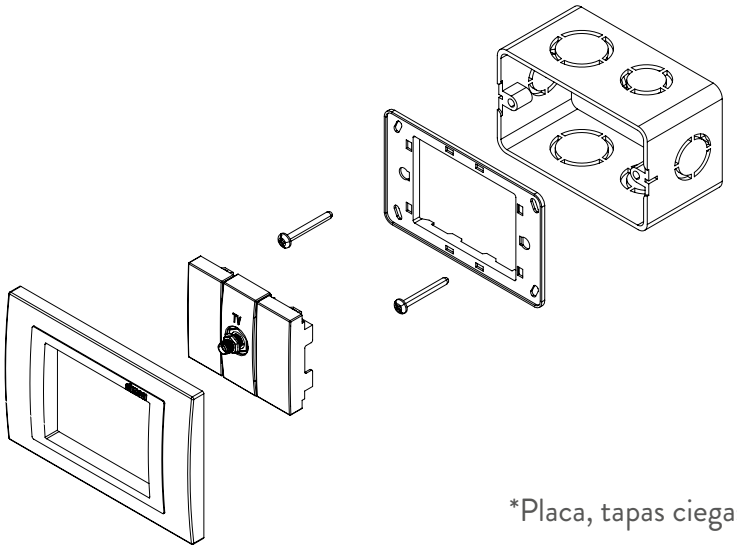

*Placa, tapas ciegas y chasis NO incluidos