R-TV+Sat signal outlet, intermediate matt black Simon 270

REF. **20000487-098**

BASIC INFORMATION

DESCRIPTION

Intermediate R-TV+SAT signal outlet from the Simon 270 series, designed for cascade installations between the single outlet and the end outlet. FM/TV male and SAT female output connector, with IEC shielding and 75 Ω impedance. Made of thermoplastic, it measures 45 x 45 mm. Pass band from 47 to 862 MHz for R-TV and from 950 to 2150 MHz for SAT, with a tap attenuation greater than 25 dB. Suitable for flush mounting in a universal back box, in a horizontal position. Protection rating IP20. Operating temperature range: 5 to 45 °C. Storage temperature range: -25 to 50 °C. Clean with a soft cloth lightly dampened with soapy water, avoiding abrasive or chlorine-based cleaners. Up to 9 available finish colours: 090 Glossy White; 190 Matte White; 091 Copper; 093 Aluminium; 094 Champagne; 095 Gold; 096 Titanium; 097 Bronze; 098 Matte Black.

FINISH

Matt black

MATERIAL

Thermoplastic

COMPATIBILITY

Simon 270 frames

PACKAGING CONTENTS

R-TV+SAT socket, cover and instruction sheet

ETIM CLASS

EC000439

TECHNICAL INFORMATION

AVAILABLE MARKET
CE

COMPATIBLE 12V AC/DC
No

COMPATIBLE 230V AC/DC
No

CABLE SECTION ADMITTED (MM)
From 1,5 to 2,5 mm

CONNECTOR TYPE
R/TV+SAT

NUMBER OF POSSIBLE ELEMENTS
1 element

FORMAT
R/TV,SAT

IP RATING
IP20

MAINTENANCE
Clean with a soft, dry cloth. Do not use abrasive cloths or cleaning products that contain chlorine.

TYPE OF MECHANISM
Insertion

OPERATING TEMPERATURE RANGE (ºC)
5 - 45 ºC

RAL
9005

STORAGE TEMPERATURE RANGE (ºC)
-25 - 50 ºC

TV INSERTION LOSS (MHZ)
3,5 dB

SAT INSERTION LOSS (MHZ)
5 dB

TV TAP LOSS (MHZ)
7,5 dB

SAT TAP LOSS (MHZ)
9 dB

TAP ATTENUATION (DB)
>25 dB

INSTALLATION AND MAINTENANCE

CABLE STRIPPING NECESSARY (MM)
8

INSTALLABLE IN FLUSH MOUNT JUNCTION BOX
Universal

INSTALLATION DIRECTION
Horizontal

INSTALLATION TYPE
Suitable for flush mounting

TYPE OF TERMINAL CONNECTION - FUNCTION 1
Screw

REGULATIONS

REGULATIONS

Dir. 2014/30/UE EMC | Dir. 2011/65/UE RoHS + post. mod. | EN 50083-2:2012 + A1:2015 | EN IEC 63000:2018

LOGISTICS INFORMATION

UNITARY EAN CODE
8421053266236

UNITARY PACKAGING HEIGHT
0

UNITARY PACKAGING WIDTH
0

UNITARY PACKAGING LENGTH
0

UNITARY PACKAGING MEASUREMENT UNIT
MMT

UNITARY PACKAGING VOLUME
0

UNITARY PACKAGING VOLUME UNIT
MMQ

UNITARY PACKAGING GROSS WEIGHT
0.088

PRODUCT NET WEIGHT
0.088

UNITARY PACKAGING WEIGHT UNIT
KGM

PACKAGING EAN
8421053264959

UNITS CONTAINED PACKAGING
10

PACKAGING HEIGHT
55.5

PACKAGING WIDTH
117

PACKAGING LENGTH
280

PACKAGING MEASUREMENT UNIT
MMT

PACKAGING VOLUME
1818180

PACKAGING VOLUME UNIT
MMQ

PACKAGING GROSS WEIGHT
0

PACKAGING NET WEIGHT
0.88

INTERMEDIA
20000487-09

FINAL
20000488-09x

UNICA
20000486-09x

En Serie/Cascada

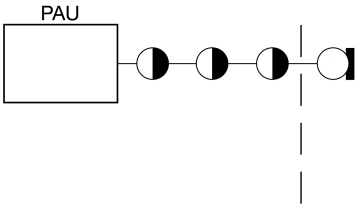

En Estrella

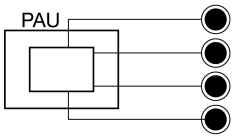

1

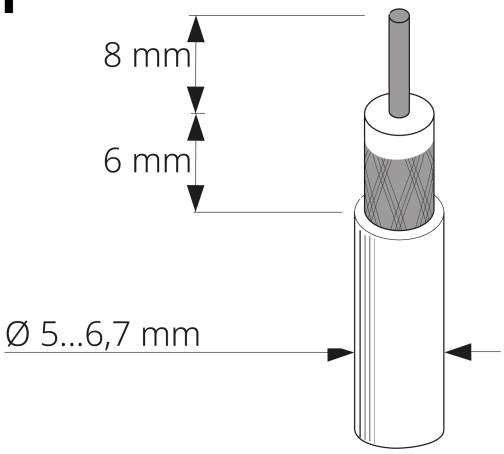

2

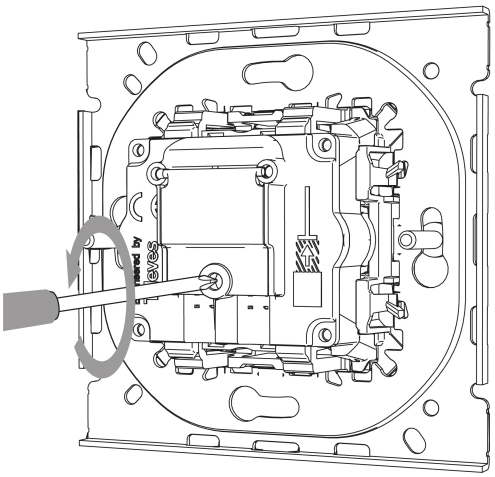

3

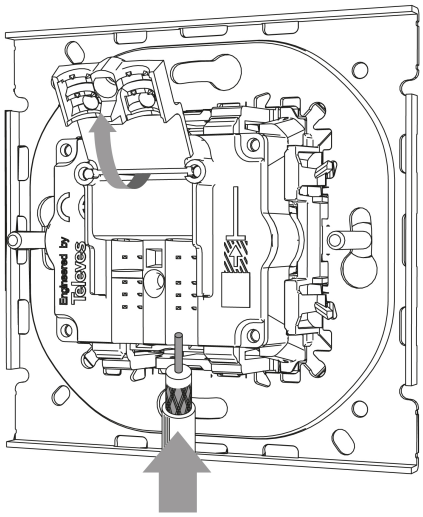

4

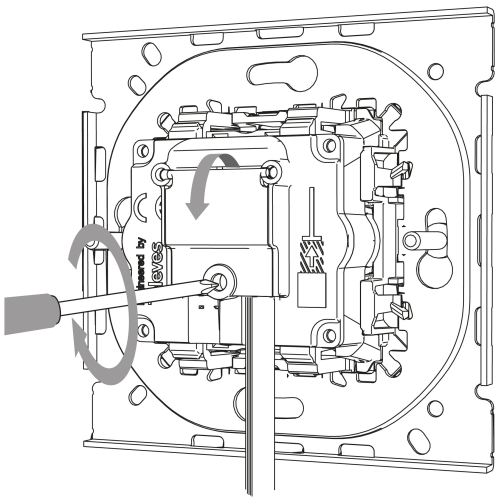

Para información más detallada consultar la hoja de instrucciones
For more detailed information check the instruction sheet