Cover for schuko + 2USB C+C black matte Simon 360

REF. **36000361-098**

BASIC INFORMATION

DESCRIPTION

Cover for schuko + 2USB C+C in black finish from the Simon 360 series. The matte finish, in addition to being trendy and integrating into any environment, prevents light reflections and reduces maintenance by minimizing stains and fingerprints. Soft and high-quality touch that provides a sophisticated product feel in all colors of the series. Urea is the main material and has high resistance and durability, ensuring a prolonged lifespan. Cover designed for installation in Simon 75 mechanisms.

FINISH

Matt black

COMPATIBILITY

Tomada Simon 75

MATERIAL

Steel,Thermostable

ETIM CLASS

EC000011

REMARKS

Available in 3 matte finishes s360. Frame available in the same color as the selected interior to create a single-color set or the possibility of a bicolor set. For cleaning, it is recommended to use a cloth slightly dampened with soapy water, avoiding the use of abrasive cloths or cleaners containing chlorine, to prevent damage to the product's surface.

TECHNICAL INFORMATION

FORMAT
Schuko,USB C

IP RATING
IP20

MAINTENANCE
Clean with a soft, dry cloth. Do not use abrasive cloths or cleaning products that contain chlorine.

RAL
9005

INSTALLATION AND MAINTENANCE

REMOVAL OF COVER
Only with tool

LOGISTICS INFORMATION

UNITARY EAN CODE
8421053437605

UNITARY PACKAGING HEIGHT
0

UNITARY PACKAGING WIDTH
0

UNITARY PACKAGING LENGTH
0

UNITARY PACKAGING MEASUREMENT UNIT
MMT

UNITARY PACKAGING VOLUME
0

UNITARY PACKAGING VOLUME UNIT
MMQ

UNITARY PACKAGING GROSS WEIGHT
0.032

PRODUCT NET WEIGHT
0.027

UNITARY PACKAGING WEIGHT UNIT
KGM

PACKAGING EAN
8421053437612

UNITS CONTAINED PACKAGING
5

PACKAGING HEIGHT
85

PACKAGING WIDTH
80

PACKAGING LENGTH
120

PACKAGING MEASUREMENT UNIT
MMT

PACKAGING VOLUME
816000

PACKAGING VOLUME UNIT
MMQ

PACKAGING GROSS WEIGHT
0.164

PACKAGING NET WEIGHT
0.135

PACKAGING WEIGHT UNIT
KGM

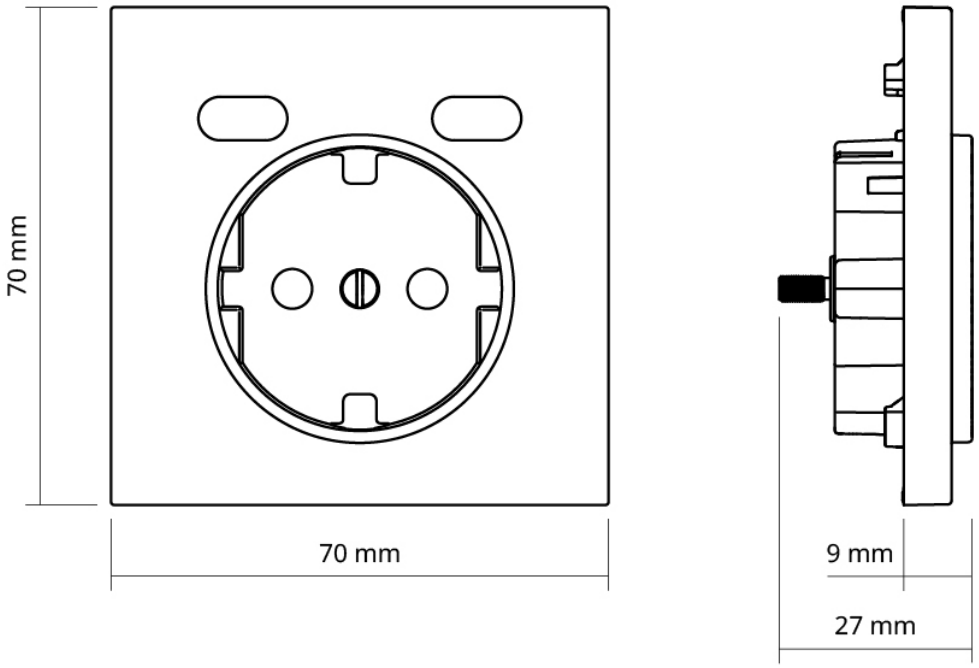
70 mm
70 mm
9 mm
27 mm