INTERMEDIATE SWITCH WITH SCREW TERMINAL CONNECTION SYSTEM MATT WHITE SIMON 82 CONCEPT

REF. **8200251-090**



BASIC INFORMATION

FINISH
Matt white

COMPATIBILITY
Simon 82

PACKAGING
Flow pack

PACKAGING CONTENTS
Mechanism

ETIM CLASS
EC001590

TECHNICAL INFORMATION

AVAILABLE MARKET
CE

CABLE SECTION ADMITTED (MM)
2,5 mm

NUMBER OF POSSIBLE ELEMENTS
1 item

FORMAT
Rocker, mechanism and frame-holder

INDICATOR FUNCTION
No

CURRENT (A)
10 AX

IP RATING
IP20

TYPE OF MECHANISM
Rocker switch

MONOBLOCK
No

NOMINAL VOLTAGE (V~)
250 V~

OPERATING TEMPERATURE RANGE (°C)
5 - 40 °C

STORAGE TEMPERATURE RANGE (°C)
-25 - 50 °C

VERSION
Single

INSTALLATION AND MAINTENANCE

CLAW
Not possible

INSTALLABLE IN FLUSH MOUNT JUNCTION BOX
Universal

INSTALLATION TYPE
Suitable for surface or recessed mount

TYPE OF TERMINAL CONNECTION - FUNCTION 1
Fast

REGULATIONS

WARRANTY
3 years

REGULATIONS
Directive 2011/65/UE RoHS + EN 50581:2012 + IEC 60884-1 Ed 3.2

LOGISTICS INFORMATION

UNITARY EAN CODE
8421053279823

UNITARY PACKAGING HEIGHT
0

UNITARY PACKAGING WIDTH
0

UNITARY PACKAGING LENGTH
0

UNITARY PACKAGING MEASUREMENT UNIT
MMT

UNITARY PACKAGING VOLUME
0

UNITARY PACKAGING VOLUME UNIT
MMQ

UNITARY PACKAGING GROSS WEIGHT
0.078

PRODUCT NET WEIGHT
0.078

UNITARY PACKAGING WEIGHT UNIT
KGM

PACKAGING EAN
8421053228104

UNITS CONTAINED PACKAGING
5

PACKAGING HEIGHT
82

PACKAGING WIDTH
165

PACKAGING LENGTH
223

PACKAGING MEASUREMENT UNIT
MMT

PACKAGING VOLUME
3017190

PACKAGING VOLUME UNIT
MMQ

PACKAGING GROSS WEIGHT
0.392

PACKAGING NET WEIGHT
0.39

PACKAGING WEIGHT UNIT
KGM

MECANISMOS SIMON 31, 75, 77, 82 Y 88

Mecanismos básicos / Basic switches

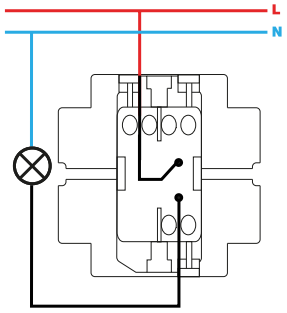

Interruptor unipolar / Single-pole switch
XXXX101-XXX

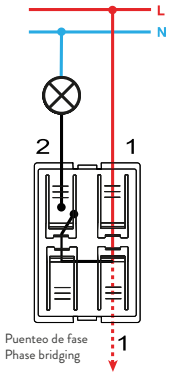

Interruptor unipolar / Single-pole switch
7700101-039

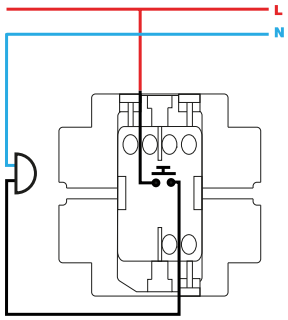

Pulsador / Push button switch
XXXX150-XXX

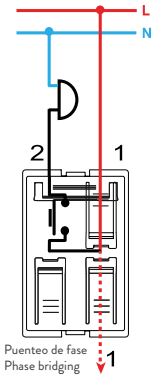

Pulsador / Push button switch
7700150-039

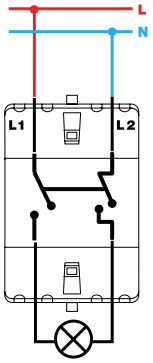

Interruptor bipolar / Double pole switch
XXXX133-XXX

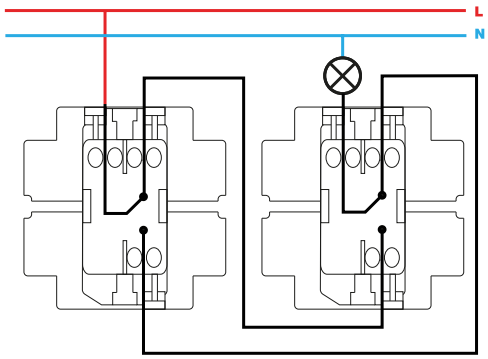

Conmutador / 2-way switch
XXXX201-XXX

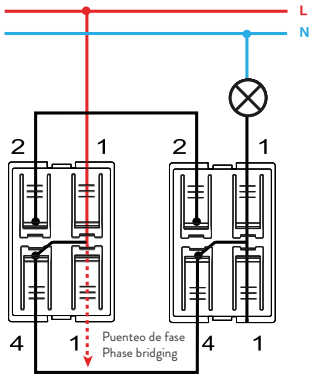

Conmutador / 2-way switch
7700201-039

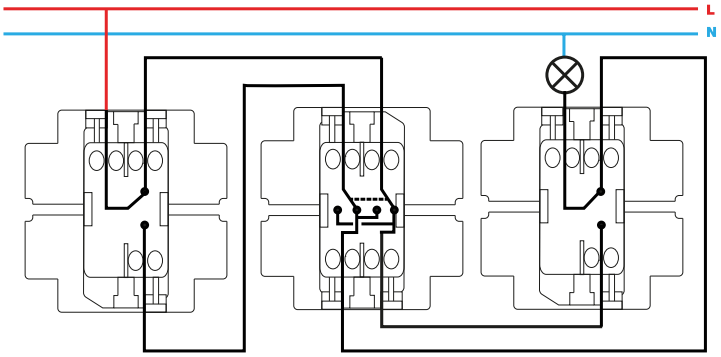

Conmutador cruce / Intermediate switch
XXXX251-XXX

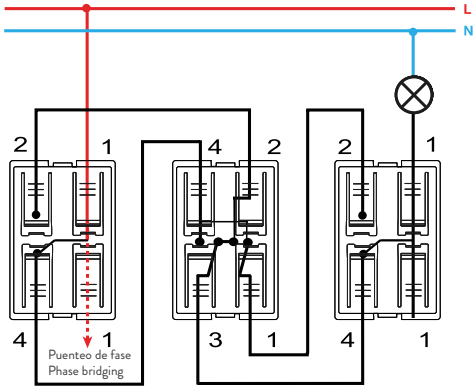

Conmutador cruce / Intermediate switch
7700251-039

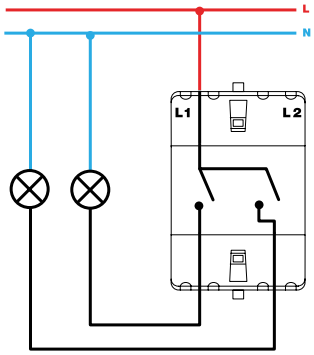

Grupo 2 interruptores / 2 switches group
XXXX398-XXX

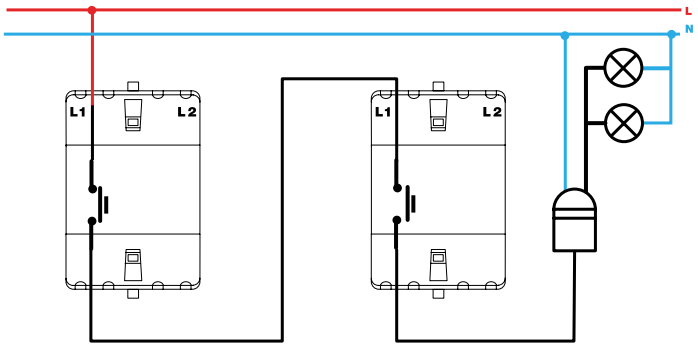

Pulsador desconexión / Push button desconexion switch
XXXX152-XXX

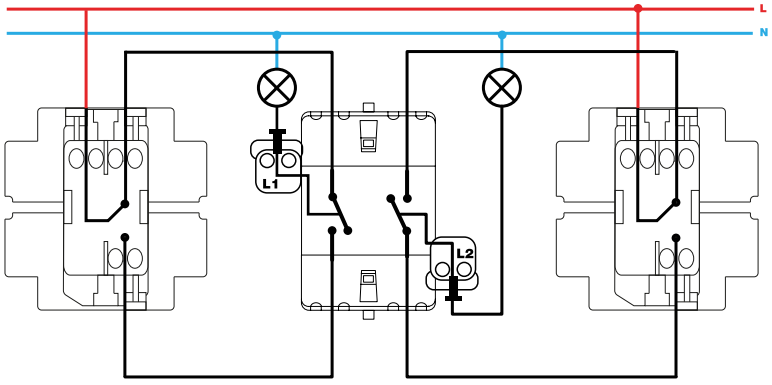

Grupo dos conmutadores / 2-way switches group
XXXX397-XXX

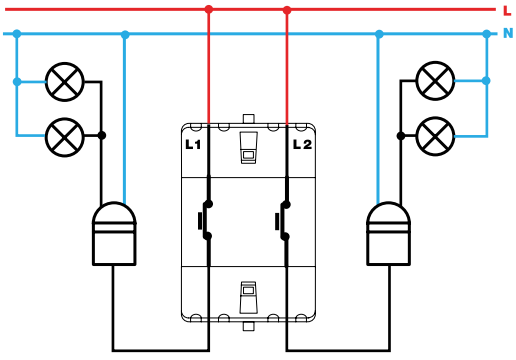

Grupo de pulsadores desconexión / Push button switch desconexion group XXXX395-XXX

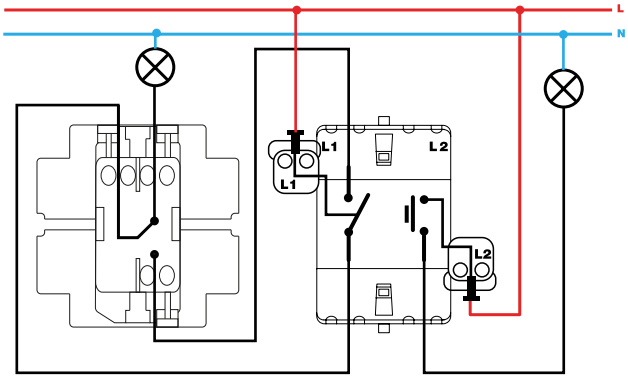

Grupo conmutador y pulsador / 2-way and push button switch group
XXXX301-XXX

Mecanismos con piloto / Pilot switches

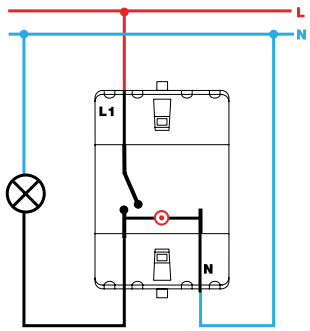

Interruptor unipolar / Single-pole switch
XXXX102-XXX

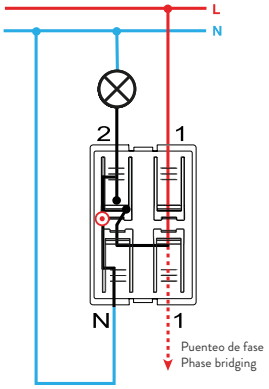

Interruptor con piloto / Push button pilot switch
7700112-039

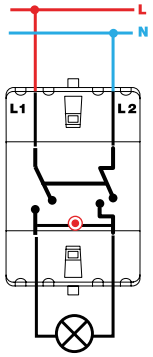

Interruptor bipolar / Double pole switch
XXXX134-XXX

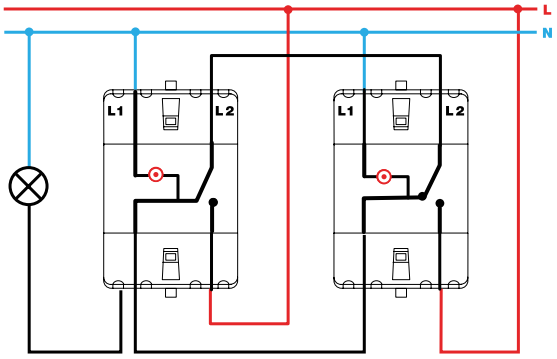

Conmutador / 2-way switch
XXXX202-XXX

Mecanismos con luminoso / Switches with light

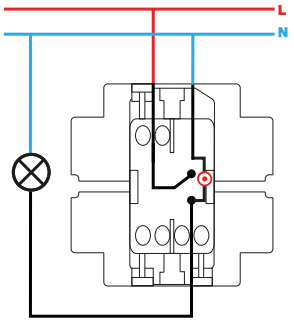

Interruptor unipolar con luminoso / Single-pole switch with light
XXXX104-XXX

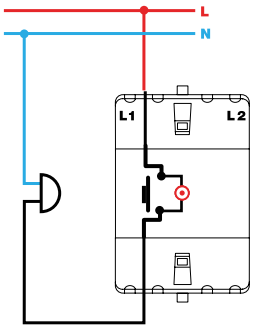

Pulsador con luminoso / Push button switch with light
XXXX160-XXX

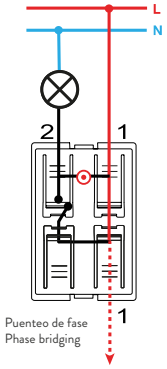

Pulsador con luminoso / Push button switch with light
7700160-039

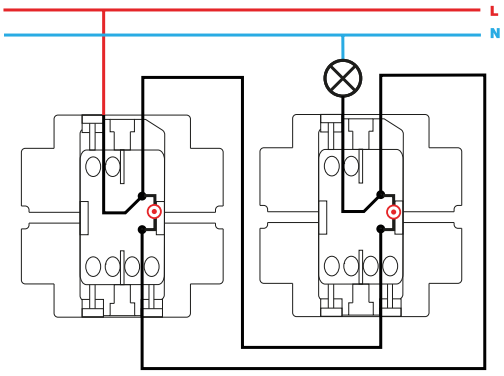

Conmutador con luminoso / 2-way switch with light
XXXX204-XXX

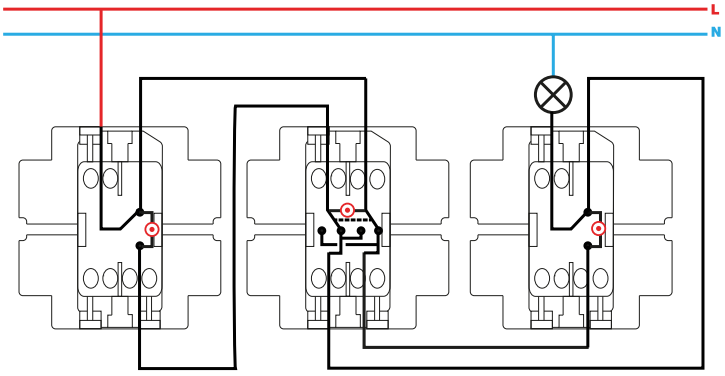

Conmutador cruce con luminoso / Intermediate switch with light
XXXX254-XXX