Card switch with 2 microswitches and light indicator 230V~ bronze Simon 270

REF. **20000550-097**

BASIC INFORMATION

DESCRIPTION

Discover the Simon iO blinds switch with slender rocker 700 VA bronze Simon 270 from the Simon 270 series. A product designed to deliver functionality, compatibility and style for residential and commercial installations.

FINISH

Bronze

TYPE OF ROCKER

Large

MATERIAL

Plastic

COMPATIBILITY

Simon 270 frames

PACKAGING CONTENTS

Mechanism, cover and instruction sheet

ETIM CLASS

EC001590

simon

TECHNICAL INFORMATION

AVAILABLE MARKET
CE

CABLE SECTION ADMITTED (MM)
From 1,5 to 2,5 mm

CONSUMPTION INDICATOR (MA)
1 mA

NUMBER OF POSSIBLE ELEMENTS
1 element

FORMAT
Card

FREQUENCY
50 - 60 Hz

INDICATOR FUNCTION
Yes

CURRENT (A)
10 AX

IP RATING
IP20

MAINTENANCE
Clean with a soft, dry cloth. Do not use abrasive cloths or cleaning products that contain chlorine.

TYPE OF MECHANISM
Card

NOMINAL VOLTAGE (V~)
250 V~

OPERATING TEMPERATURE RANGE (°C)
5 - 45 °C

POWER SUPPLY (V~)
250 V~

RAL
3033

STORAGE TEMPERATURE RANGE (°C)
-25 - 50 °C

VERSION
1 element

VOLTAGE (V~)
250 V~

INSTALLATION AND MAINTENANCE

CABLE STRIPPING NECESSARY (MM)
7

INSTALLABLE IN FLUSH MOUNT JUNCTION BOX
Universal

INSTALLATION DIRECTION
Horizontal, Vertical

INSTALLATION TYPE
Suitable for flush mounting

TYPE OF TERMINAL CONNECTION - FUNCTION 1
FastON 2.8mm

REGULATIONS

REGULATIONS
Dir. 2014/35/UE LVD|Dir. 2011/65/UE RoHS + post. mod.|EN 61058-1-2:2016|EN IEC 63000:2018

LOGISTICS INFORMATION

UNITARY EAN CODE
8421053265208

UNITARY PACKAGING HEIGHT
0

UNITARY PACKAGING WIDTH
0

UNITARY PACKAGING LENGTH
0

UNITARY PACKAGING MEASUREMENT UNIT
MMT

UNITARY PACKAGING VOLUME
0

UNITARY PACKAGING VOLUME UNIT
MMQ

UNITARY PACKAGING GROSS WEIGHT
0.046

PRODUCT NET WEIGHT
0.046

UNITARY PACKAGING WEIGHT UNIT
KGM

PACKAGING EAN
8421053265208

UNITS CONTAINED PACKAGING
1

PACKAGING HEIGHT
80

PACKAGING WIDTH
55

PACKAGING LENGTH
55

PACKAGING MEASUREMENT UNIT
MMT

PACKAGING VOLUME
242000

PACKAGING VOLUME UNIT
MMQ

PACKAGING GROSS WEIGHT
0

PACKAGING NET WEIGHT
0.046

PACKAGING WEIGHT UNIT
KGM

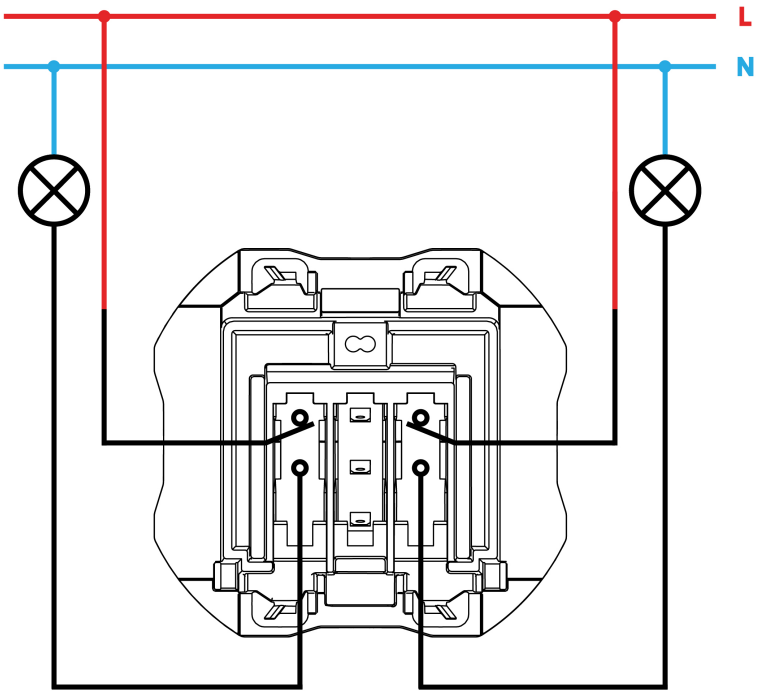
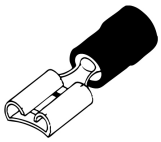
Conexión con terminal faston
Conection with faston terminal