Cover for USB C+C IP44 white matte Simon 360

REF. **36002076-190**

BASIC INFORMATION

DESCRIPTION

USB C+C cover with IP44 protection in white finish from the Simon 360 series. The matte finish, besides being trendy and blending into any environment, avoids light reflections and reduces maintenance by minimizing stains and fingerprints. Smooth and quality touch that provides a sense of sophisticated product in all the colors of the series. Urea is the main material and it boasts high resistance and durability, ensuring a long lifespan. Cover designed for installation in Simon 75 mechanisms.

FINISH

Matt white

MATERIAL

Thermostable,Steel

SYMBOL

IP44

ETIM CLASS

EC000011

REMARKS

Available in 3 matte finishes s360. Frame available in the same colour as the selected interior to create a monochrome set or a two-tone combination.

TECHNICAL INFORMATION

AVAILABLE MARKET
CE

FORMAT
USB C

INDICATOR FUNCTION
No

IP RATING
IP44

MAINTENANCE
Clean with a soft, dry cloth. Do not use abrasive cloths or cleaning products that contain chlorine.

OPERATING TEMPERATURE RANGE (ºC)
+5...+40

STORAGE TEMPERATURE RANGE (ºC)
-25...+50

INSTALLATION AND MAINTENANCE

REMOVAL OF COVER
Only with tool

INSTALLATION DIRECTION
Horizontal, Vertical

LOGISTICS INFORMATION

UNITARY EAN CODE
8421053463437

UNITARY PACKAGING HEIGHT
0

UNITARY PACKAGING WIDTH
0

UNITARY PACKAGING LENGTH
0

UNITARY PACKAGING VOLUME
0

UNITARY PACKAGING GROSS WEIGHT
0

PRODUCT NET WEIGHT
0

UNITARY PACKAGING WEIGHT UNIT
KGM

PACKAGING EAN
8421053453308

UNITS CONTAINED PACKAGING
5

PACKAGING HEIGHT
90

PACKAGING WIDTH
80

PACKAGING LENGTH
80

PACKAGING MEASUREMENT UNIT
MMT

PACKAGING VOLUME
576000

PACKAGING VOLUME UNIT
MMQ

PACKAGING GROSS WEIGHT
0.13

PACKAGING NET WEIGHT
0

PACKAGING WEIGHT UNIT
KGM

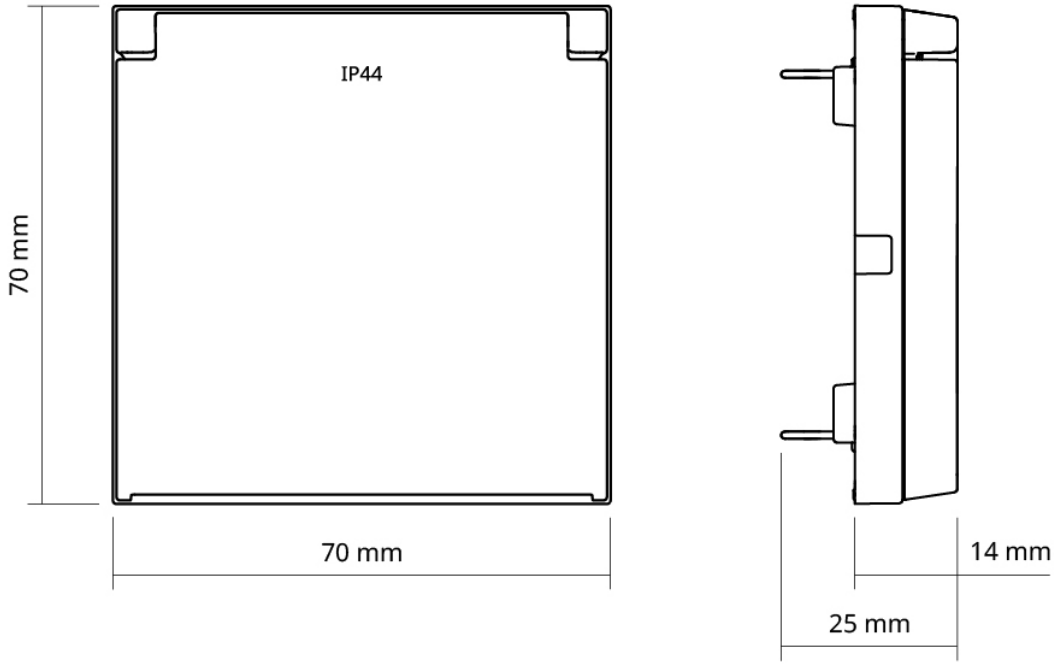
IP44
70 mm
70 mm
14 mm
25 mm

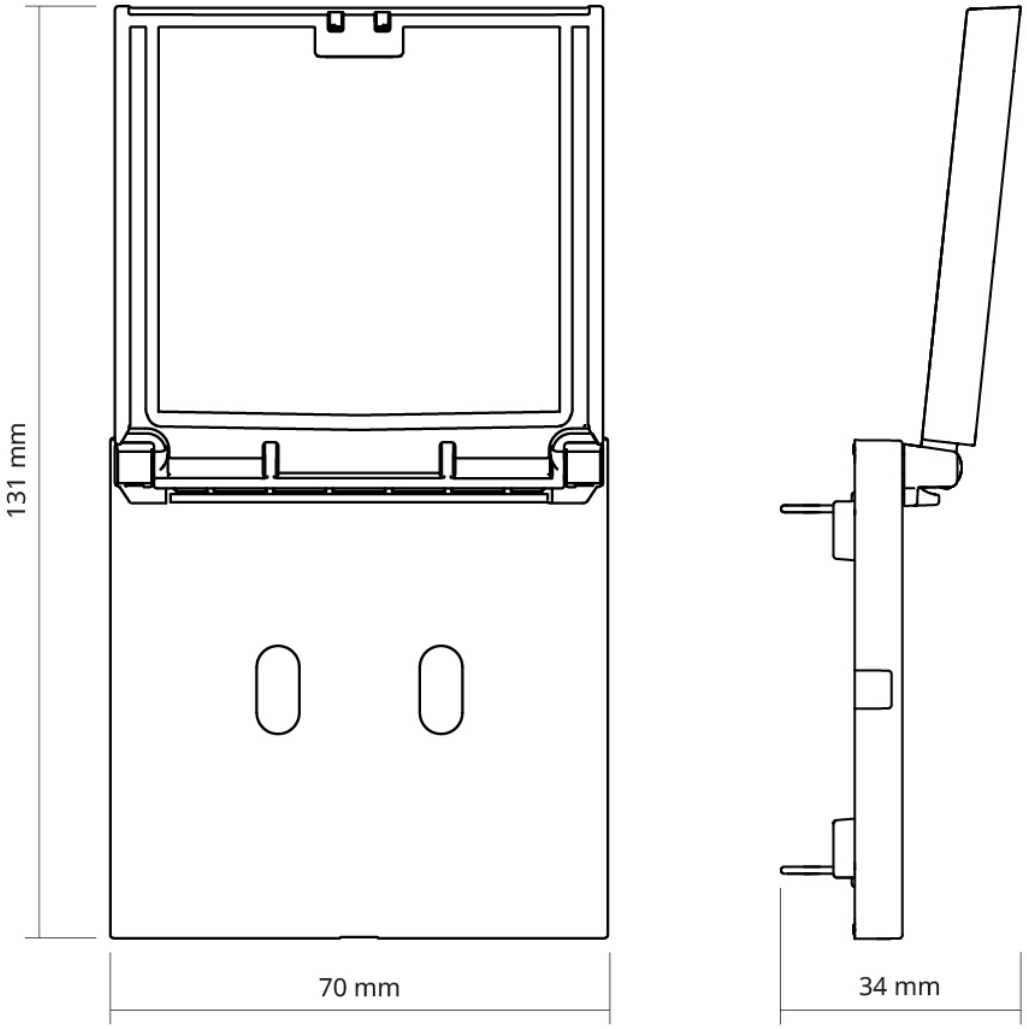
131 mm
70 mm
34 mm