HDMI connector v2.0 4K female-female Simon 75

REF. **7511094-039**

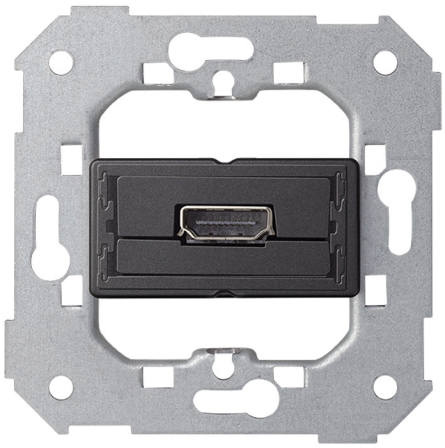

BASIC INFORMATION

DESCRIPTION

The HDMI connector v2.0 4K female-female Simon 75 is the ideal solution for integrating HDMI connections in high-definition audiovisual installations. Designed as a through module, it allows linking HDMI cables while maintaining compatibility with the HDMI 2.0 standard and resolutions up to 4K, ensuring stable transmission of digital audio and video. This female-female HDMI connector is perfect for homes, offices, meeting rooms, hotels, or commercial spaces that require HDMI sockets flush-mounted in the wall for televisions, projectors, consoles, or multimedia systems. Compatible with the Simon 75, Simon 82, and Simon 360 series, it is installed in a universal box occupying 1 double element, suitable for surface or flush mounting. A practical and professional solution for modern multimedia installations with integrated HDMI 4K connectivity.

MATERIAL

Plastic,Metal

COMPATIBILITY

Marcos Simon 75, Simon 82 Detail, Simon 82 Nature, Simon 82 Concept and Simon 82

ETIM CLASS

EC000018

TECHNICAL INFORMATION

NUMBER OF CONNECTORS
1

FORMAT
HDMI

LINKABLE
No

CONNECTOR TYPE
HDMI

IP RATING
IP20

RECESS DIMENSION (MM)
40

INSTALLATION AND MAINTENANCE

CLAW
Simon 27

REMOVAL OF COVER
Only with tool

INSTALLATION DIRECTION
Horizontal, Vertical

TYPE OF TERMINAL CONNECTION - FUNCTION 1
Conector

LOGISTICS INFORMATION

UNITARY EAN CODE
8421053297339

UNITARY PACKAGING HEIGHT
0

UNITARY PACKAGING WIDTH
0

UNITARY PACKAGING LENGTH
0

UNITARY PACKAGING VOLUME
0

UNITARY PACKAGING GROSS WEIGHT
0.055

PRODUCT NET WEIGHT
0.055

UNITARY PACKAGING WEIGHT UNIT
KGM

PACKAGING EAN
8421053297339

UNITS CONTAINED PACKAGING
1

PACKAGING HEIGHT
60

PACKAGING WIDTH
76

PACKAGING LENGTH
75

PACKAGING MEASUREMENT UNIT
MMT

PACKAGING VOLUME
342000

PACKAGING VOLUME UNIT
MMQ

PACKAGING GROSS WEIGHT
0

PACKAGING NET WEIGHT
0.055

PACKAGING WEIGHT UNIT
KGM

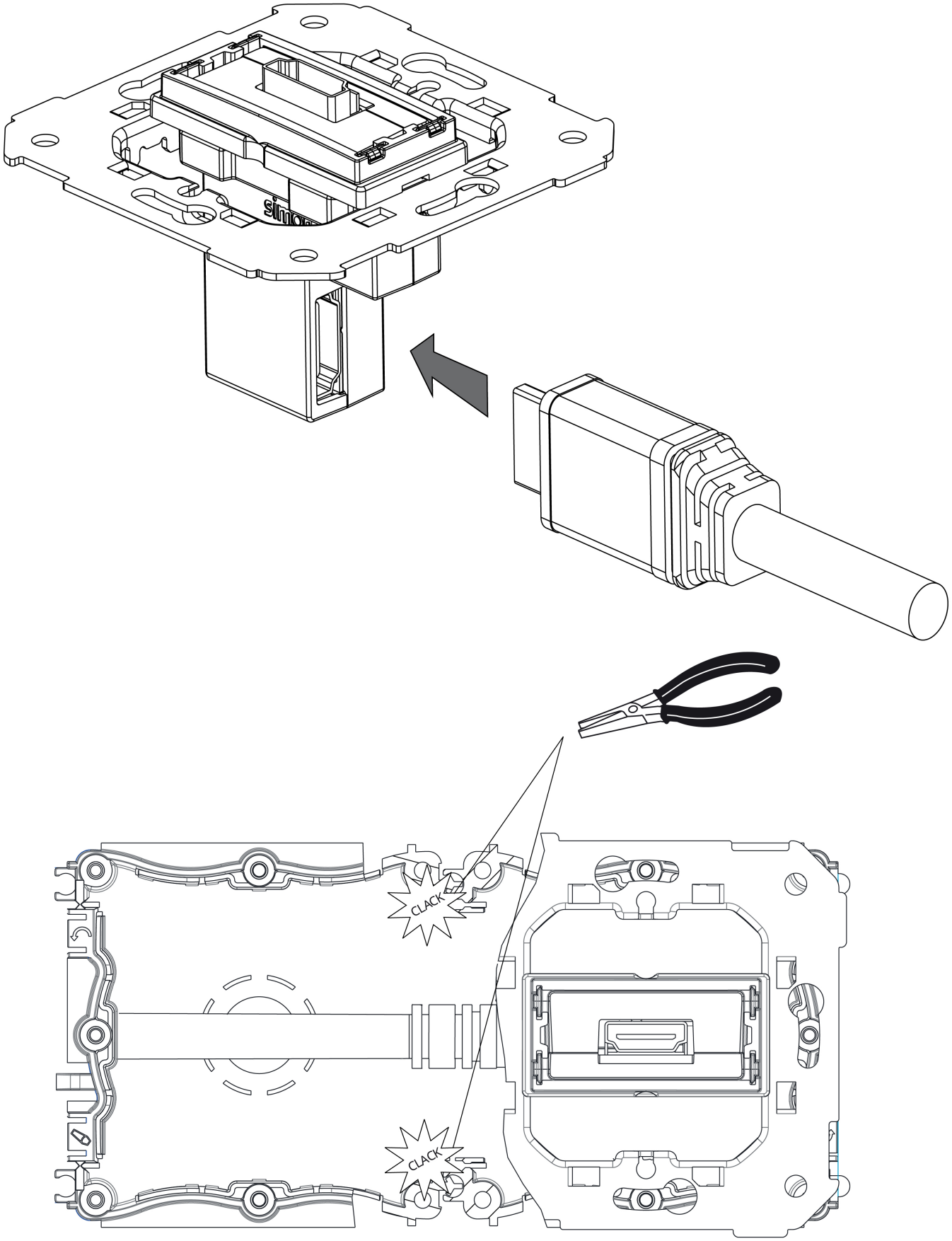
CLACK
CLACK

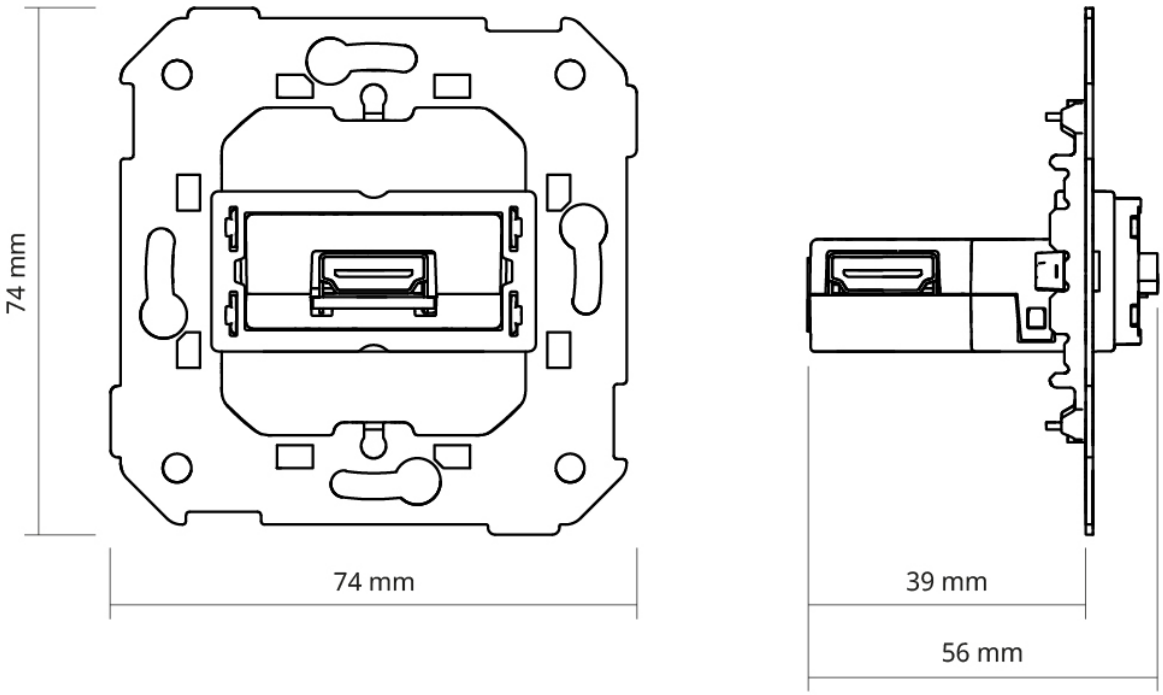
74 mm
74 mm
39 mm
56 mm