Blinds/louvres switch Simon 100

REF. **10001359-039**

BASIC INFORMATION

DESCRIPTION

Blinds/louvres switch from the Simon 100 iO series. Allows regulation of louvre orientation via electric actuation. Designed for flush-mounted installation and compatible with Simon iO connected systems.

MATERIAL

ABS Plastic

ETIM CLASS

EC000044

REMARKS

Element designed for the control of adjustable slat blinds SuperGradhermetic via the ISG80/83 SOMFY controller. Requires Desktop HUB for installation and operation (communication via Z-Wave protocol).

TECHNICAL INFORMATION

AVAILABLE MARKET

CE

NUMBER OF CONTACTS

4

FREQUENCY

50 - 60 Hz

CURRENT (A)

10 AX

IP RATING

IP20

MAINTENANCE

Clean with a soft, dry cloth. Do not use abrasive cloths or cleaning products that contain chlorine.

MAXIMUM POWER (W)

2

OPERATING TEMPERATURE RANGE (ºC)

+5...+40

POWER SUPPLY (V~)

125/250 V~

VOLTAGE (V~)

125/250 V~

NUMBER OF WIRES

5

INSTALLATION AND MAINTENANCE

INSTALLATION DIRECTION
Horizontal, Vertical

TYPE OF TERMINAL CONNECTION - FUNCTION 1
Screw

LOGISTICS INFORMATION

UNITARY EAN CODE
8421053301760

UNITARY PACKAGING HEIGHT
0

UNITARY PACKAGING WIDTH
0

UNITARY PACKAGING LENGTH
0

UNITARY PACKAGING VOLUME
0

UNITARY PACKAGING GROSS WEIGHT
0.083

PRODUCT NET WEIGHT
0.083

UNITARY PACKAGING WEIGHT UNIT
KGM

PACKAGING EAN
8421053301760

UNITS CONTAINED PACKAGING
1

PACKAGING HEIGHT
55

PACKAGING WIDTH
65

PACKAGING LENGTH
65

PACKAGING MEASUREMENT UNIT
MMT

PACKAGING VOLUME
232375

PACKAGING VOLUME UNIT
MMQ

PACKAGING GROSS WEIGHT
0.104

PACKAGING NET WEIGHT
0.083

PACKAGING WEIGHT UNIT
KGM

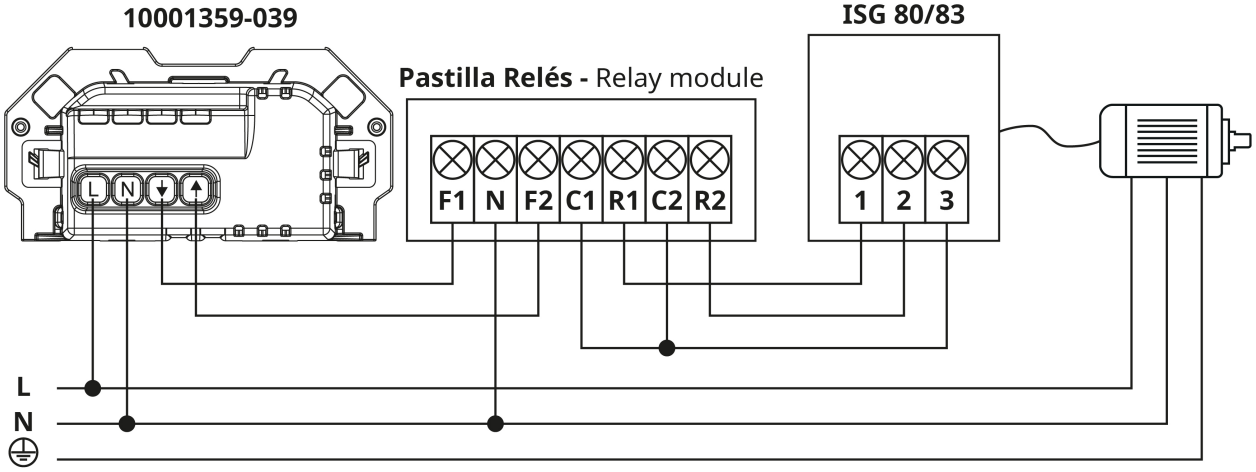

Para información más detallada consultar la hoja de instrucciones
For more detailed information check the instruction sheet