Simon iO slatted blinds switch 700 VA matt white Simon 270

REF. **21000359-190**

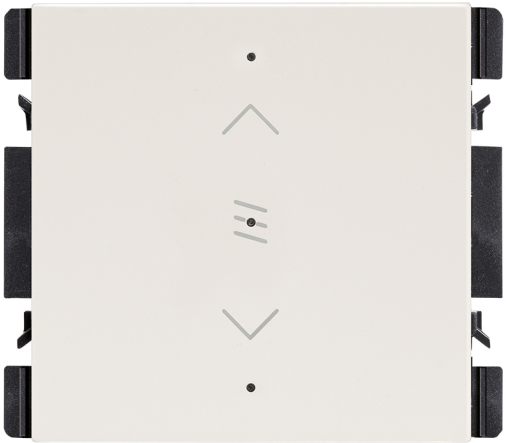

BASIC INFORMATION

DESCRIPTION

Discover the Simon iO blinds switch with slender rocker 700 VA bronze Simon 270 from the Simon 270 series. A product designed to deliver functionality, compatibility and style for residential and commercial installations.

FINISH

Matt white

MATERIAL

Plastic,Metal

ETIM CLASS

EC000044

SYMBOL

Arrow

COMPATIBILITY

Simon 270 frames

REMARKS

Device intended for the control of SuperGradhermetic adjustable slat blinds by means of the SOMFY ISG80/83 controller.

TECHNICAL INFORMATION

AVAILABLE MARKET
CE

FREQUENCY
50 - 60 Hz

INDICATOR FUNCTION
Yes

CURRENT (A)
10 A

NUMBER OF SWITCHES
1

IP RATING
IP20

MAINTENANCE
Clean with a soft, dry cloth. Do not use abrasive cloths or cleaning products that contain chlorine.

RAL
9003

INSTALLATION AND MAINTENANCE

CABLE STRIPPING NECESSARY (MM)
7

INSTALLATION DIRECTION
Horizontal, Vertical

TYPE OF TERMINAL CONNECTION - FUNCTION 1
Screw

LOGISTICS INFORMATION

UNITARY EAN CODE
8421053399712

UNITARY PACKAGING HEIGHT
0

UNITARY PACKAGING WIDTH
0

UNITARY PACKAGING LENGTH
0

UNITARY PACKAGING VOLUME
0

UNITARY PACKAGING GROSS WEIGHT
0.051

PRODUCT NET WEIGHT
0.051

UNITARY PACKAGING WEIGHT UNIT
KGM

PACKAGING EAN
8421053399712

UNITS CONTAINED PACKAGING
1

PACKAGING HEIGHT
80

PACKAGING WIDTH
55

PACKAGING LENGTH
110

PACKAGING MEASUREMENT UNIT
MMT

PACKAGING VOLUME
484000

PACKAGING VOLUME UNIT
MMQ

PACKAGING GROSS WEIGHT
0.051

PACKAGING NET WEIGHT
0.051

PACKAGING WEIGHT UNIT
KGM

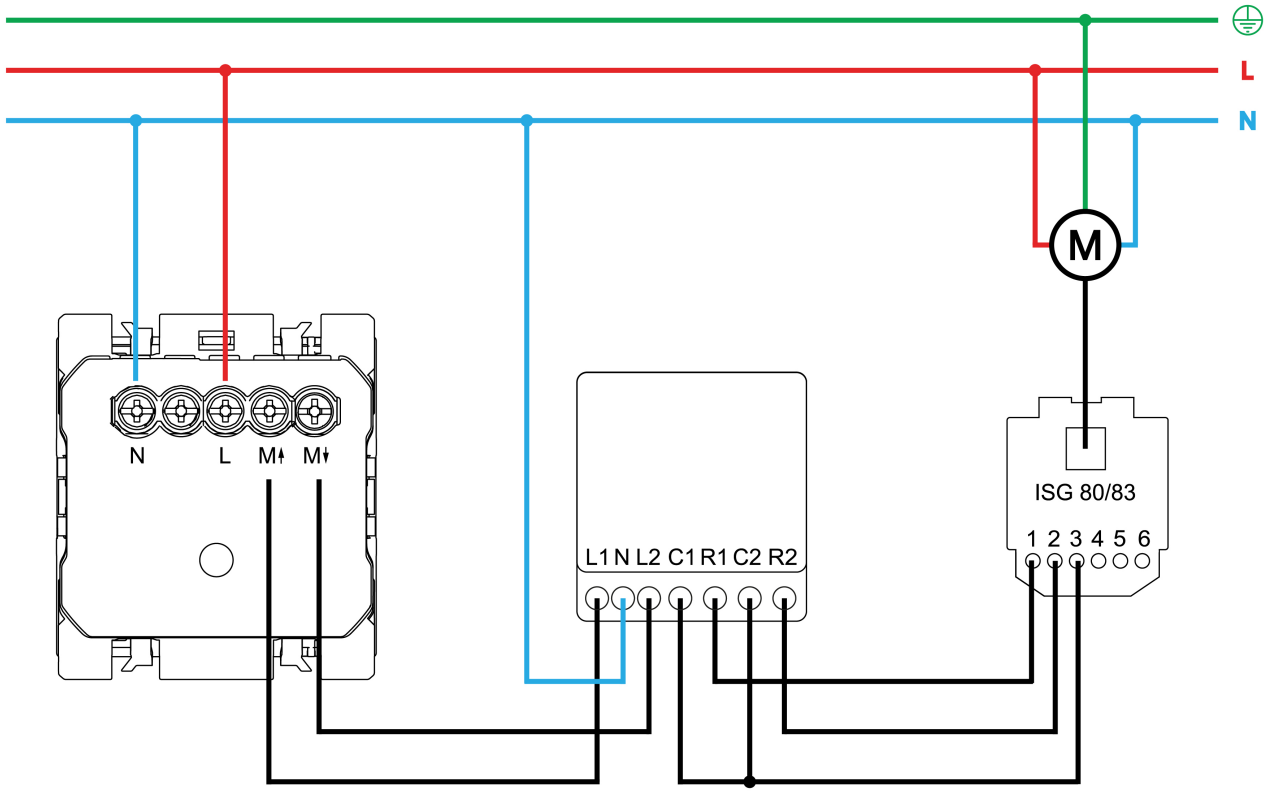

Para información más detallada consultar la hoja de instrucciones
For more detailed information check the instruction sheet