Single-pole switch 10AX 250V~ with built-in light and fast terminal connection system champagne Simon 31

REF. **31104-34**



BASIC INFORMATION

DESCRIPTION

With a design of simple lines and finishes in a stylish champagne colour, the single-pole switch of the collection Simon 31, it adapts to all kinds of environments, thanks to its decorative timeless design of notes minimalist, with indicator light, built-in and quick terminal connection, innovation and functionality to be the perfect balance in this product. With a size of 64 x 65 mm, it consists of two modules with capacity for 1 element and supports a wire cross section of 1.5 to 2.5 mm and stripping of 11mm. It is also compatible with a power of 250 Volt voltage and 10 AX intensity, and the signal function has a consumption of 1 mA. It is made of metal components with halogen-free insulation and thermoplastic trim, metallised, protecting the room in case of fire, and can reach maximum temperatures of -25 to 50 ºC. If you need to replace the indicator light, Simon 28 recommends combining it with the product reference 31802-31.

FINISH

Champagne

COMPATIBILITY

Simon 31 frames

PACKAGING CONTENTS

Mechanism with rocker

REMARKS

Can be combined with article 31802-31 if replacing the light indicator.

TECHNICAL INFORMATION

AVAILABLE MARKET
CE

CABLE SECTION ADMITTED (MM)
From 1,5 to 2,5 mm

CONSUMPTION INDICATOR (MA)
1 mA

NUMBER OF POSSIBLE ELEMENTS
1 element

INDICATOR FUNCTION
Yes

CURRENT (A)
10 AX

IP RATING
IP20

MAINTENANCE
Clean with a soft, dry cloth. Do not use abrasive cloths or cleaning products that contain chlorine.

TYPE OF MECHANISM
Pivoting

NOMINAL VOLTAGE (V~)
250 V~

OPERATING TEMPERATURE RANGE (°C)
5 - 40 °C

STORAGE TEMPERATURE RANGE (°C)
-25 - 50 °C

VERSION
Single

INSTALLATION AND MAINTENANCE

CABLE STRIPPING NECESSARY (MM)
11

INSTALLABLE IN FLUSH MOUNT JUNCTION BOX
Universal

INSTALLATION TYPE
Suitable for surface and flush mounting

TYPE OF TERMINAL CONNECTION - FUNCTION 1
Fast

REGULATIONS

REGULATIONS
UNE-EN 60669-1:2002 + A1:2003 + A2:2009

LOGISTICS INFORMATION

UNITARY PACKAGING HEIGHT
0

UNITARY PACKAGING WIDTH
0

UNITARY PACKAGING LENGTH
0

UNITARY PACKAGING VOLUME
3026595

UNITARY PACKAGING VOLUME UNIT
MMQ

UNITARY PACKAGING GROSS WEIGHT
0.091

PRODUCT NET WEIGHT
0.091

UNITARY PACKAGING WEIGHT UNIT
KGM

PACKAGING EAN
8421053008638

UNITS CONTAINED PACKAGING
10

PACKAGING HEIGHT
83

PACKAGING WIDTH
165

PACKAGING LENGTH
221

PACKAGING MEASUREMENT UNIT
MMT

PACKAGING VOLUME
3026595

PACKAGING VOLUME UNIT
MMQ

PACKAGING GROSS WEIGHT
0.91

PACKAGING NET WEIGHT
0.91

PACKAGING WEIGHT UNIT
KGM

MECANISMOS SIMON 31, 75, 77, 82 Y 88

Mecanismos básicos / Basic switches

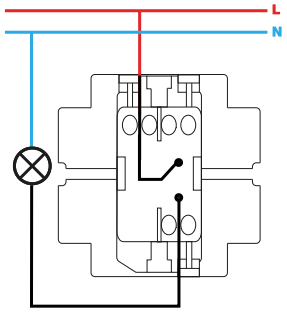

Interruptor unipolar / Single-pole switch
XXXX101-XXX

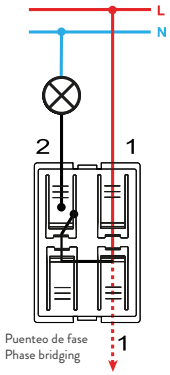

Interruptor unipolar / Single-pole switch
7700101-039

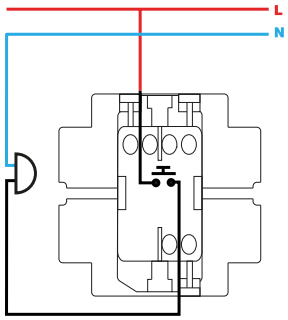

Pulsador / Push button switch
XXXX150-XXX

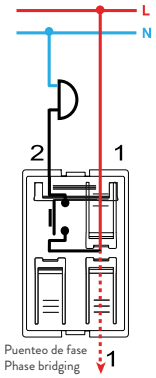

Pulsador / Push button switch
7700150-039

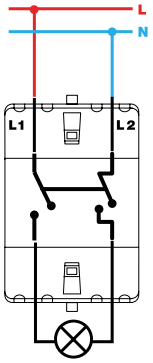

Interruptor bipolar / Double pole switch
XXXX133-XXX

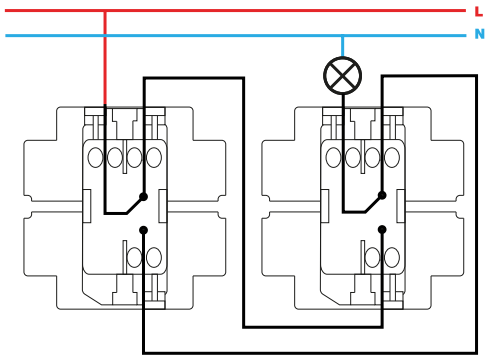

Conmutador / 2-way switch
XXXX201-XXX

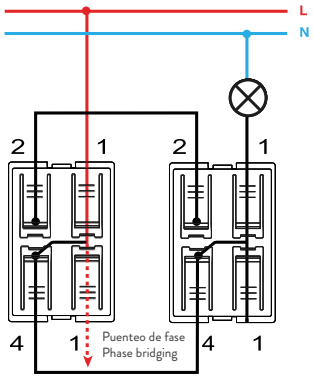

Conmutador / 2-way switch
7700201-039

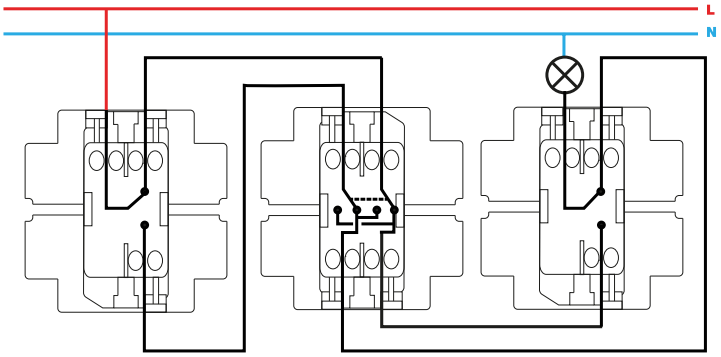

Conmutador cruce / Intermediate switch
XXXX251-XXX

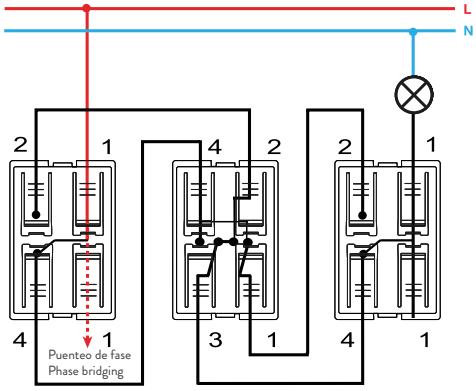

Conmutador cruce / Intermediate switch
7700251-039

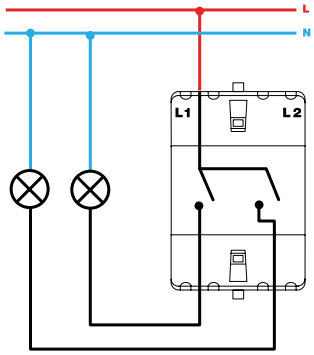

Grupo 2 interruptores / 2 switches group
XXXX398-XXX

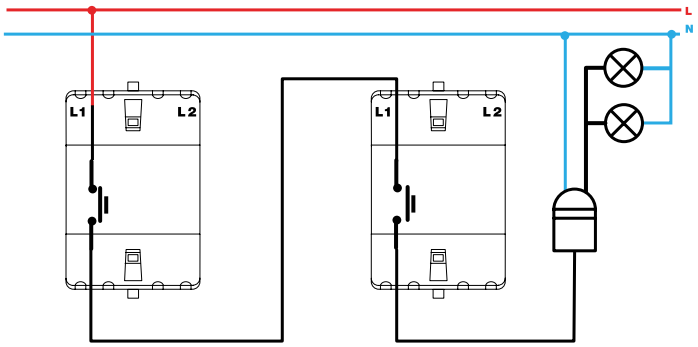

Pulsador desconexión / Push button desconexion switch
XXXX152-XXX

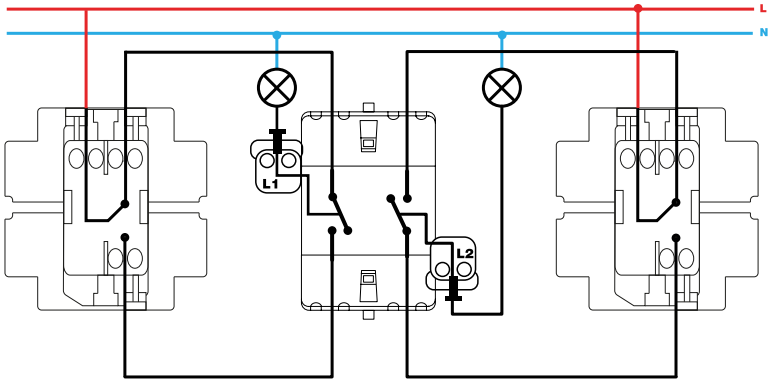

Grupo dos conmutadores / 2-way switches group
XXXX397-XXX

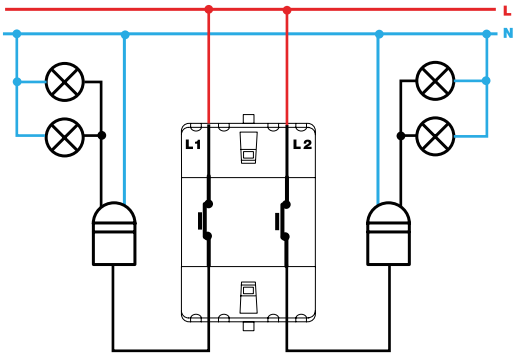

Grupo de pulsadores desconexión / Push button switch desconexion group XXXX395-XXX

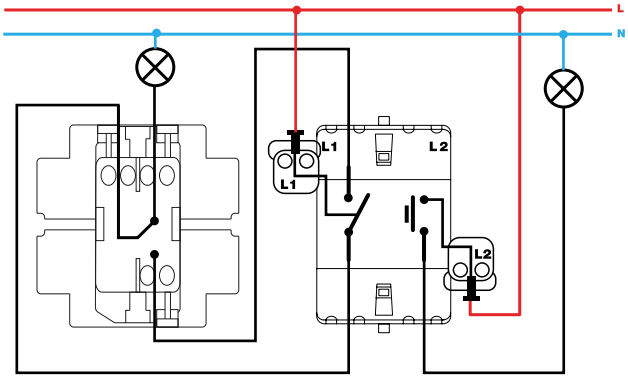

Grupo conmutador y pulsador / 2-way and push button switch group
XXXX301-XXX

Mecanismos con piloto / Pilot switches

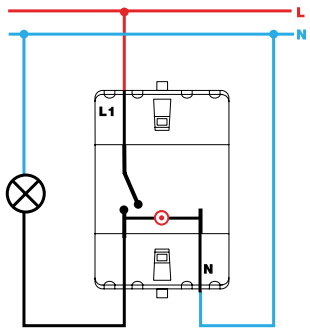

Interruptor unipolar / Single-pole switch
XXXX102-XXX

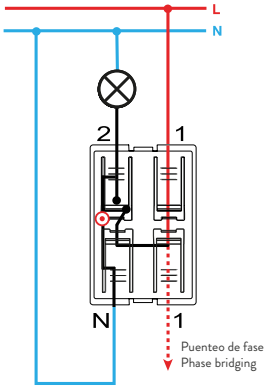

Interruptor con piloto / Push button pilot switch
7700112-039

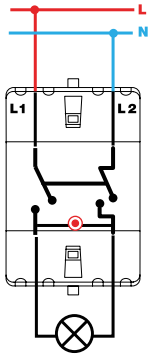

Interruptor bipolar / Double pole switch
XXXX134-XXX

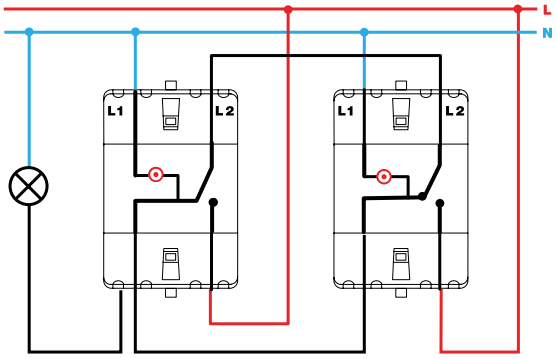

Conmutador / 2-way switch
XXXX202-XXX

Mecanismos con luminoso / Switches with light

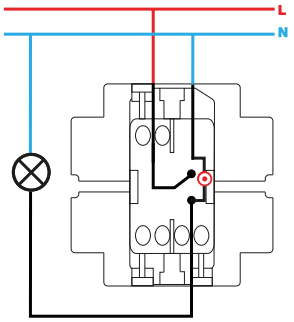

Interruptor unipolar con luminoso / Single-pole switch with light
XXXX104-XXX

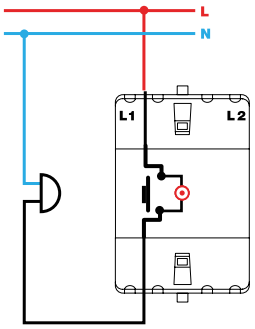

Pulsador con luminoso / Push button switch with light
XXXX160-XXX

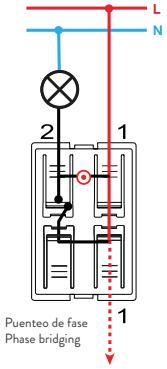

Pulsador con luminoso / Push button switch with light
7700160-039

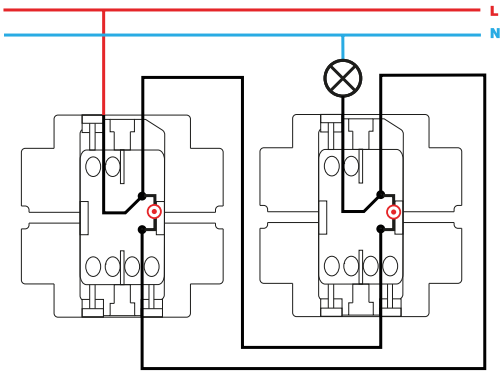

Conmutador con luminoso / 2-way switch with light
XXXX204-XXX

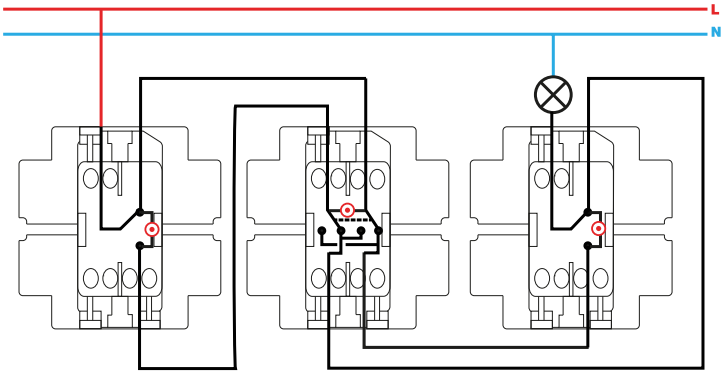

Conmutador cruce con luminoso / Intermediate switch with light
XXXX254-XXX