simon

Push button 10 A 250V~ half element and quick terminal connection system Simon 82 Centralizations

REF. **75150-69**

BASIC INFORMATION

FINISH
Wood

COMPATIBILITY
Marcos Simon 82 Centralizations

ETIM CLASS
EC000029

TECHNICAL INFORMATION

INDICATOR FUNCTION
No

CURRENT (A)
10 A

MAINTENANCE
Clean with a soft, dry cloth. Do not use abrasive cloths or cleaning products that contain chlorine.

NOMINAL VOLTAGE (V~)
250 V~

simon

INSTALLATION AND MAINTENANCE

CLAW
Simon 27

INSTALLATION DIRECTION
Horizontal, Vertical

TYPE OF TERMINAL CONNECTION - FUNCTION 1
Fast

LOGISTICS INFORMATION

UNITARY EAN CODE
8421053255803

UNITARY PACKAGING HEIGHT
0

UNITARY PACKAGING WIDTH
0

UNITARY PACKAGING LENGTH
0

UNITARY PACKAGING MEASUREMENT UNIT
MMT

UNITARY PACKAGING VOLUME
730080

UNITARY PACKAGING VOLUME UNIT
MMQ

UNITARY PACKAGING GROSS WEIGHT
0.02

PRODUCT NET WEIGHT
0.02

UNITARY PACKAGING WEIGHT UNIT
KGM

PACKAGING EAN
8421053060858

UNITS CONTAINED PACKAGING
10

PACKAGING HEIGHT
54

PACKAGING WIDTH
104

PACKAGING LENGTH
130

PACKAGING MEASUREMENT UNIT
MMT

PACKAGING VOLUME
864864

PACKAGING VOLUME UNIT
MMQ

PACKAGING GROSS WEIGHT
0.195

PACKAGING NET WEIGHT
0.2

PACKAGING WEIGHT UNIT
KGM

VISTA FRONTAL E ISOMÉTRICA DEL PRODUCTO

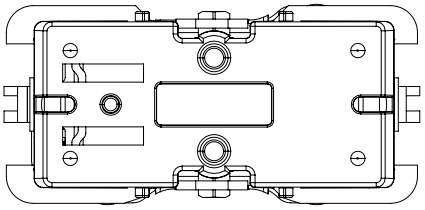

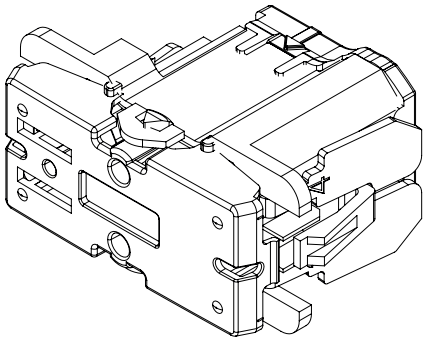

DIAGRAMA DE MONTAJE

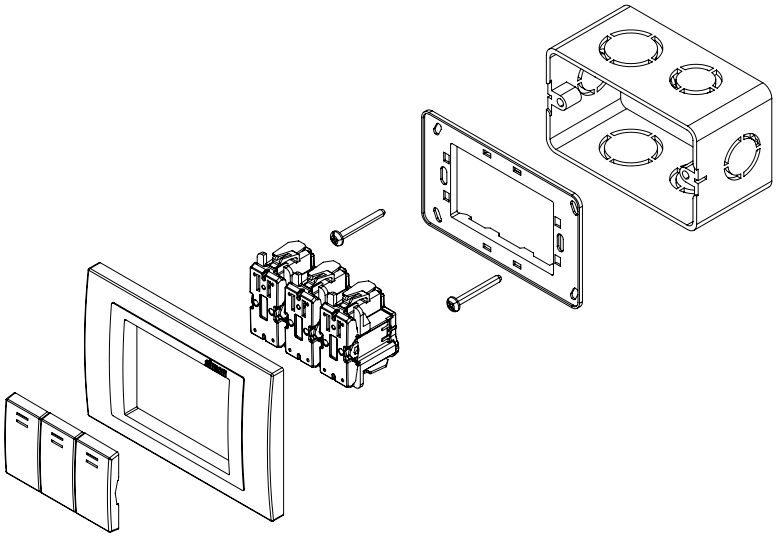

*Placa y chasis NO incluidos

DIAGRAMA DE CONEXIÓN

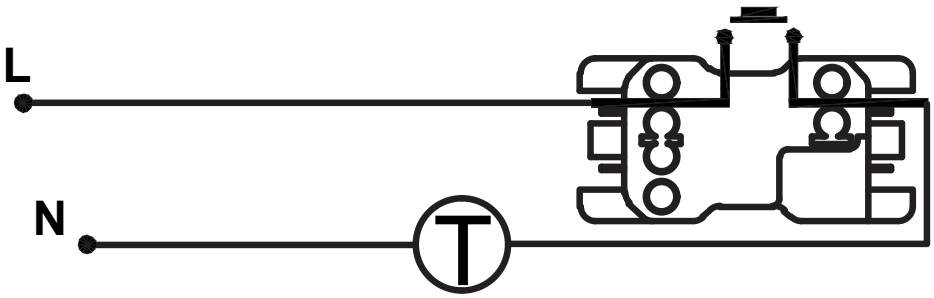

MECANISMOS SIMON 31, 75, 77, 82 Y 88

Mecanismos básicos / Basic switches

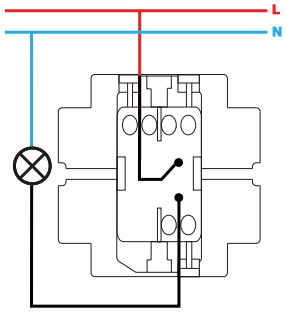

Interruptor unipolar / Single-pole switch
XXXX101-XXX

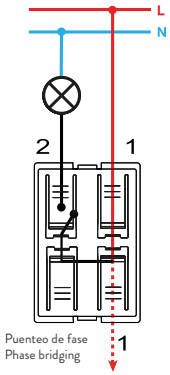

Interruptor unipolar / Single-pole switch
7700101-039

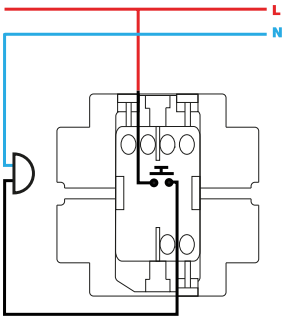

Pulsador / Push button switch
XXXX150-XXX

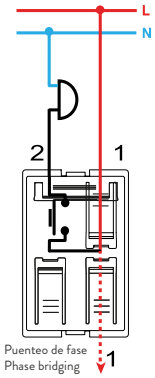

Pulsador / Push button switch
7700150-039

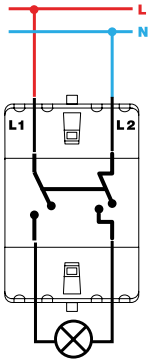

Interruptor bipolar / Double pole switch
XXXX133-XXX

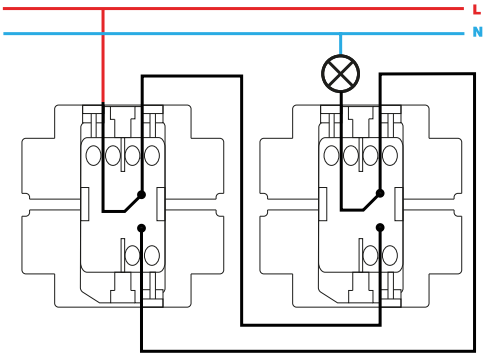

Conmutador / 2-way switch
XXXX201-XXX

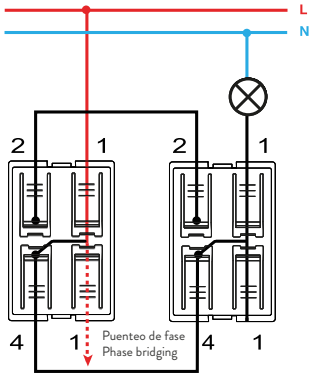

Conmutador / 2-way switch
7700201-039

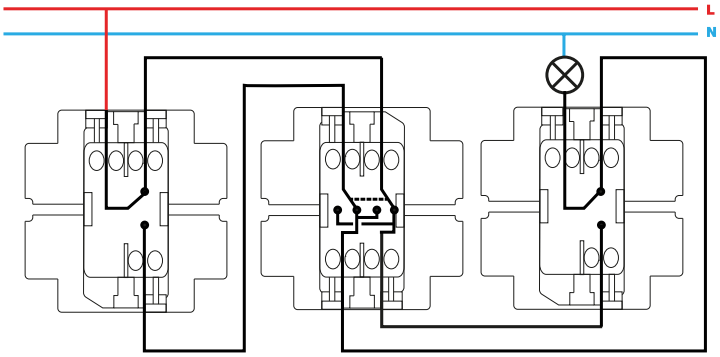

Conmutador cruce / Intermediate switch
XXXX251-XXX

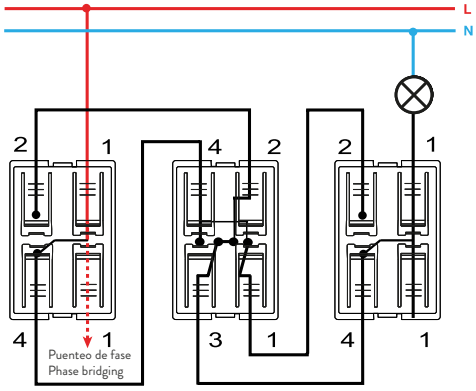

Conmutador cruce / Intermediate switch
7700251-039

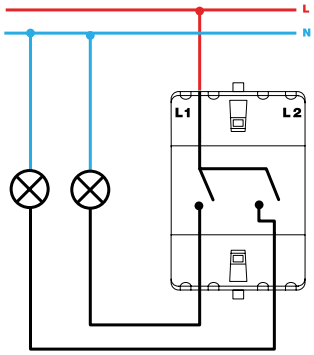

Grupo 2 interruptores / 2 switches group
XXXX398-XXX

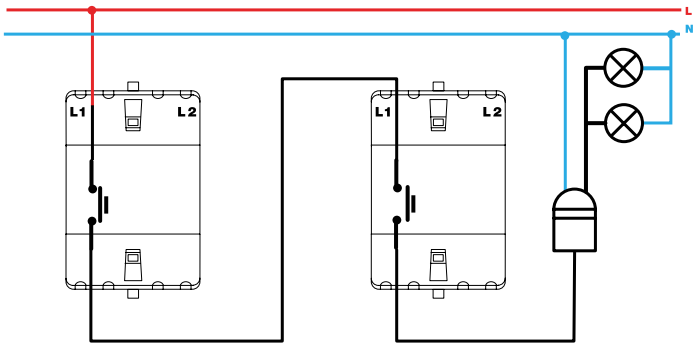

Pulsador desconexión / Push button desconexion switch
XXXX152-XXX

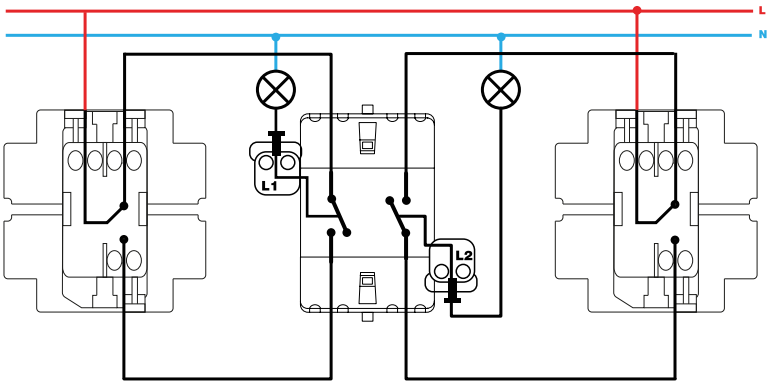

Grupo dos conmutadores / 2-way switches group
XXXX397-XXX

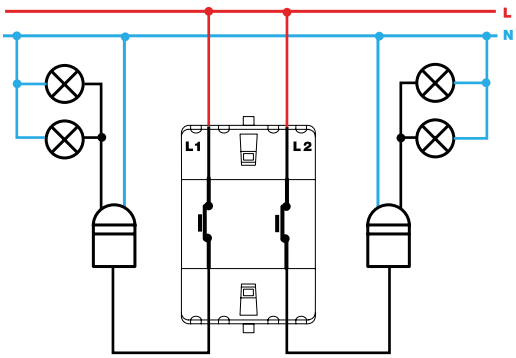

Grupo de pulsadores desconexión / Push button switch desconexion group XXXX395-XXX

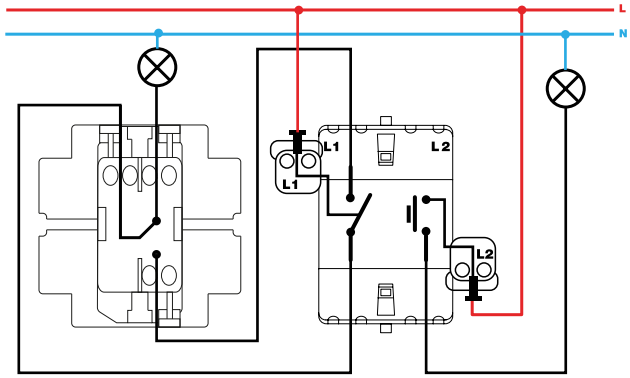

Grupo conmutador y pulsador / 2-way and push button switch group
XXXX301-XXX

Mecanismos con piloto / Pilot switches

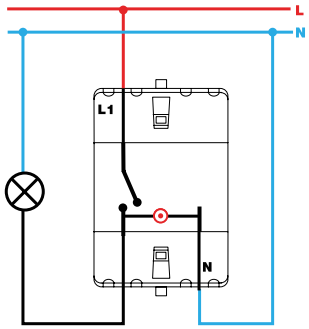

Interruptor unipolar / Single-pole switch
XXXX102-XXX

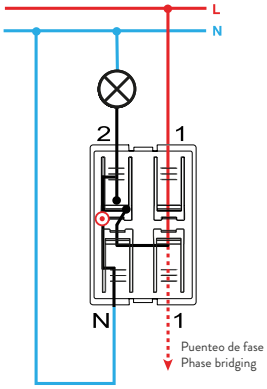

Interruptor con piloto / Push button pilot switch
7700112-039

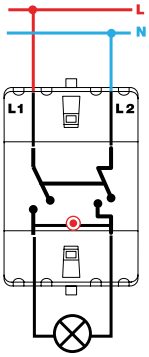

Interruptor bipolar / Double pole switch
XXXX134-XXX

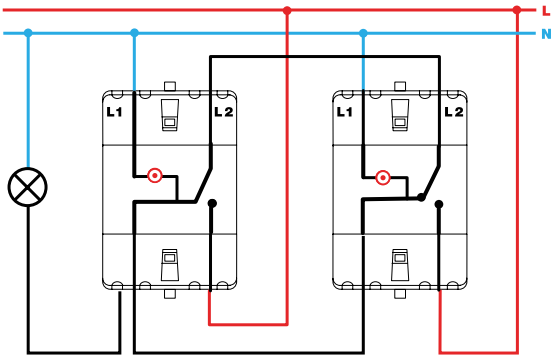

Conmutador / 2-way switch
XXXX202-XXX

Mecanismos con luminoso / Switches with light

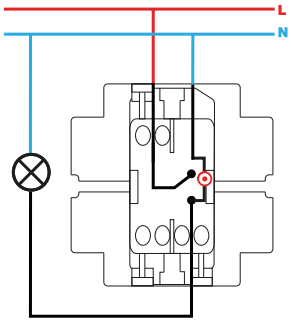

Interruptor unipolar con luminoso / Single-pole switch with light
XXXX104-XXX

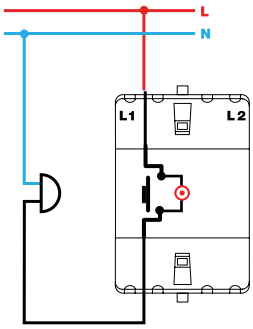

Pulsador con luminoso / Push button switch with light
XXXX160-XXX

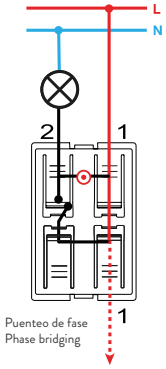

Pulsador con luminoso / Push button switch with light
7700160-039

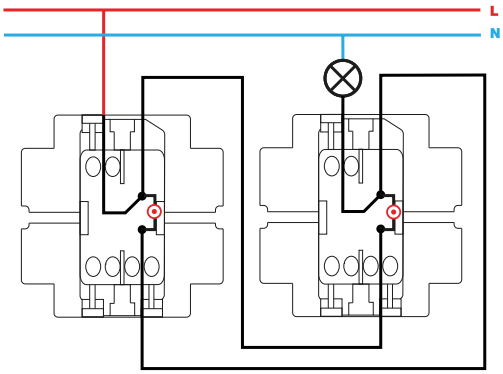

Conmutador con luminoso / 2-way switch with light
XXXX204-XXX

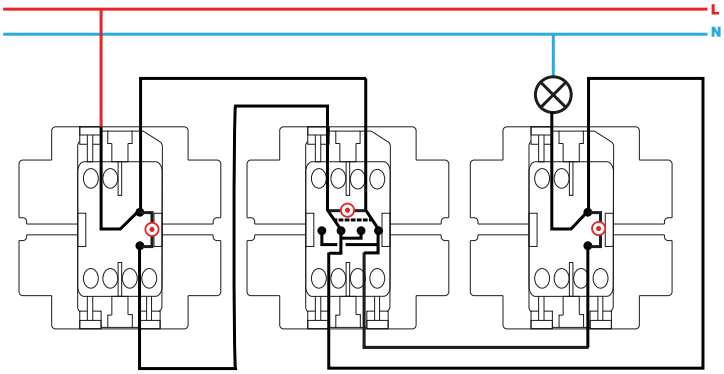

Conmutador cruce con luminoso / Intermediate switch with light
XXXX254-XXX