CROISEMENT 10AX CONNEXION RAPIDE + TOUCHE

RÉF. **8200251-038**



INFORMATION DE BASE

FINITION
Graphite

EMBALLAGE
Flow pack

CLASSE ETIM
EC001590

INFORMATION TECHNIQUE

INFORMATION LOGISTIQUE

CODE EAN UNITAIRE
8421053279816

HAUTEUR EMBALLAGE UNITAIRE
0.00

LARGEUR EMBALLAGE UNITAIRE
0.00

LONGUEUR EMBALLAGE UNITAIRE
0.00

UNITÉ DE MESURE EMBALLAGE UNITAIRE
MMT

VOLUME EMBALLAGE UNITAIRE
0.00

UNITÉ DE VOLUME EMBALLAGE UNITAIRE
MMQ

POIDS BRUT EMBALLAGE UNITAIRE
0.08

POIDS NET DU PRODUIT
0.08

UNITÉ DE POIDS EMBALLAGE UNITAIRE
KGM

EAN EMBALLAGE
8421053228944

UNIT. CONTENUES EMBALLAGE
5

HAUTEUR EMBALLAGE
83.00

LARGEUR EMBALLAGE
165.00

LONGUEUR EMBALLAGE
221.00

UNITÉ DE MESURE EMBALLAGE
MMT

VOLUME EMBALLAGE
3026595.00

UNITÉ DE VOLUME EMBALLAGE
MMQ

POIDS BRUT EMBALLAGE
0.39

POIDS NET EMBALLAGE
0.39

UNITÉ DE POIDS EMBALLAGE
KGM

MECANISMOS SIMON 31, 75, 77, 82 Y 88

Mecanismos básicos / Basic switches

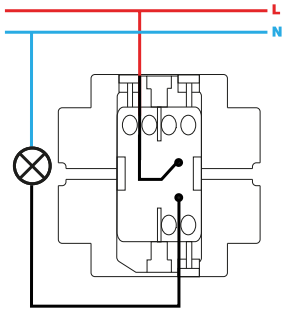

Interruptor unipolar / Single-pole switch
XXXX101-XXX

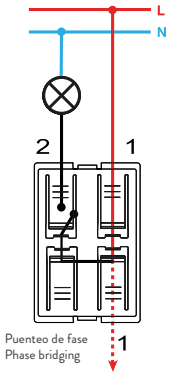

Interruptor unipolar / Single-pole switch
7700101-039

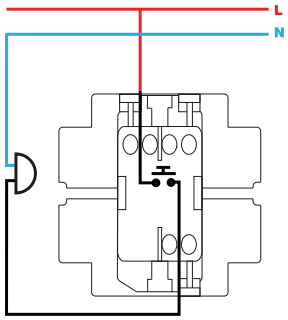

Pulsador / Push button switch
XXXX150-XXX

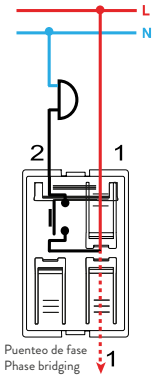

Pulsador / Push button switch
7700150-039

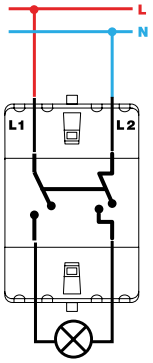

Interruptor bipolar / Double pole switch
XXXX133-XXX

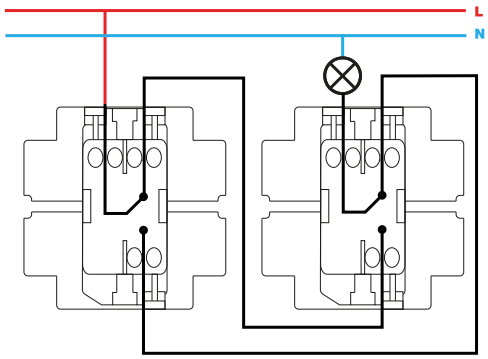

Conmutador / 2-way switch
XXXX201-XXX

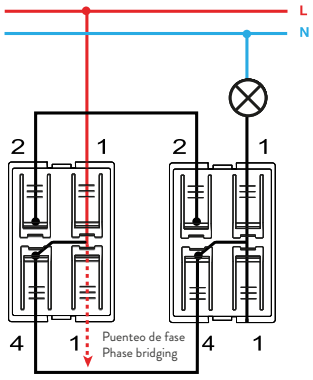

Conmutador / 2-way switch
7700201-039

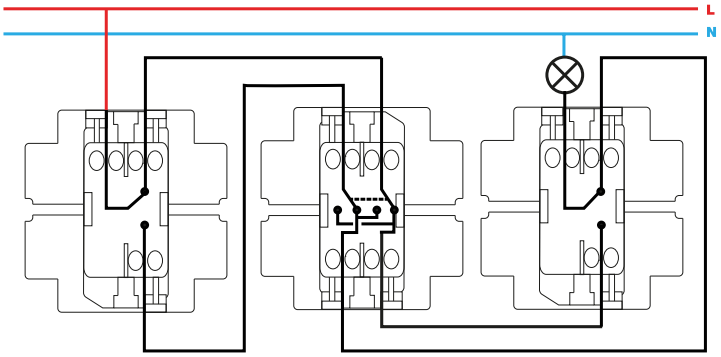

Conmutador cruce / Intermediate switch
XXXX251-XXX

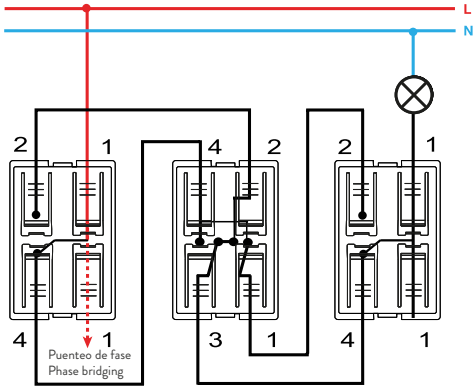

Conmutador cruce / Intermediate switch
7700251-039

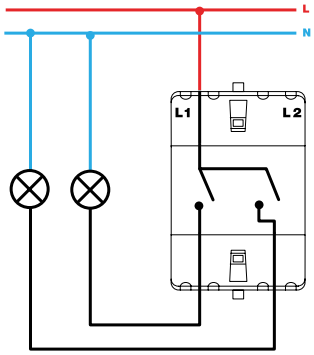

Grupo 2 interruptores / 2 switches group
XXXX398-XXX

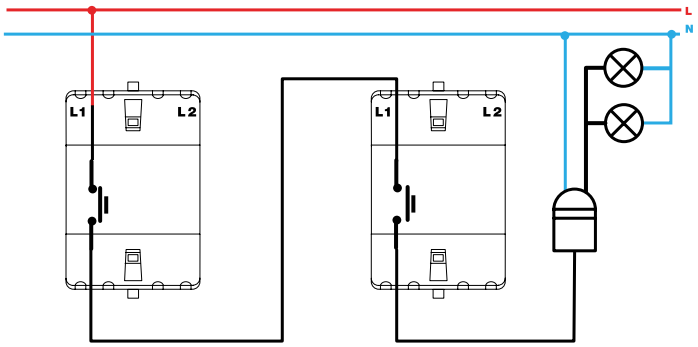

Pulsador desconexión / Push button desconexion switch
XXXX152-XXX

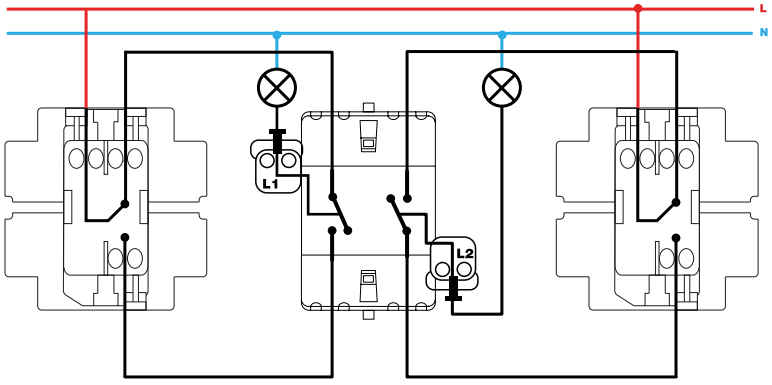

Grupo dos conmutadores / 2-way switches group
XXXX397-XXX

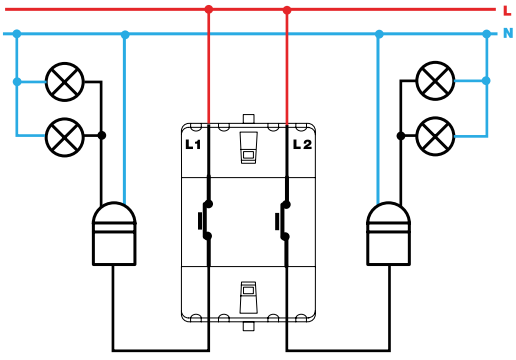

Grupo de pulsadores desconexión / Push button switch desconexion group XXXX395-XXX

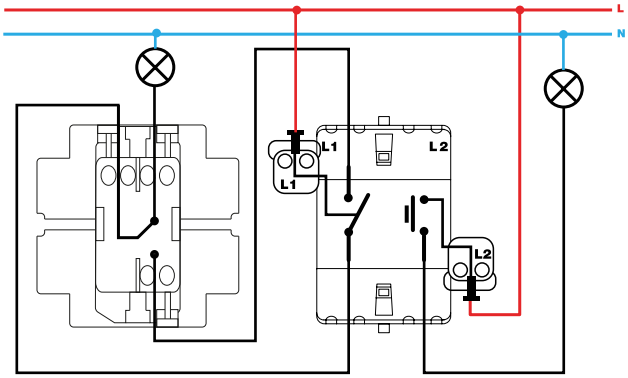

Grupo conmutador y pulsador / 2-way and push button switch group
XXXX301-XXX

Mecanismos con piloto / Pilot switches

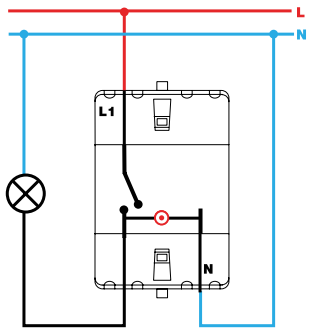

Interruptor unipolar / Single-pole switch
XXXX102-XXX

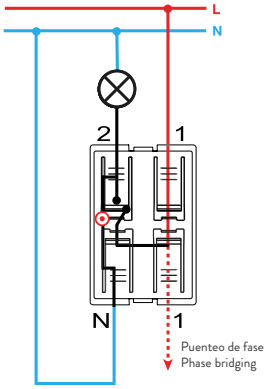

Interruptor con piloto / Push button pilot switch
7700112-039

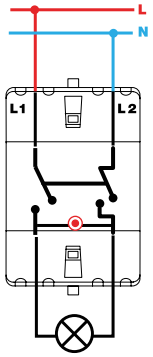

Interruptor bipolar / Double pole switch
XXXX134-XXX

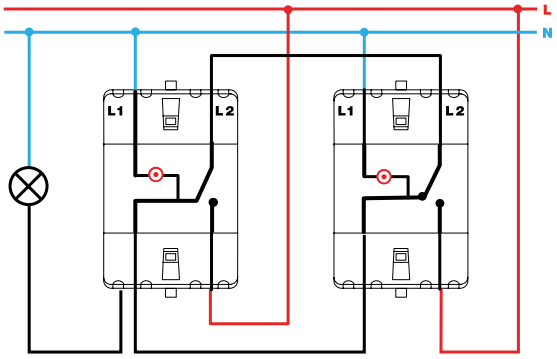

Conmutador / 2-way switch
XXXX202-XXX

Mecanismos con luminoso / Switches with light

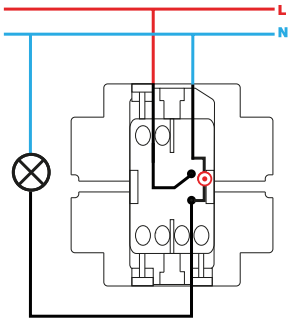

Interruptor unipolar con luminoso / Single-pole switch with light
XXXX104-XXX

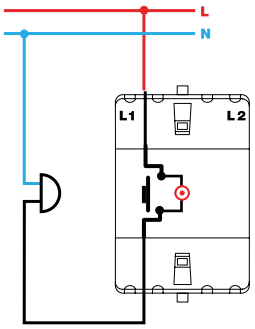

Pulsador con luminoso / Push button switch with light
XXXX160-XXX

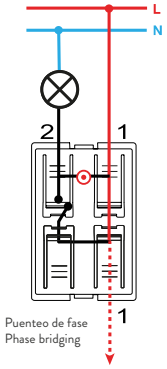

Pulsador con luminoso / Push button switch with light
7700160-039

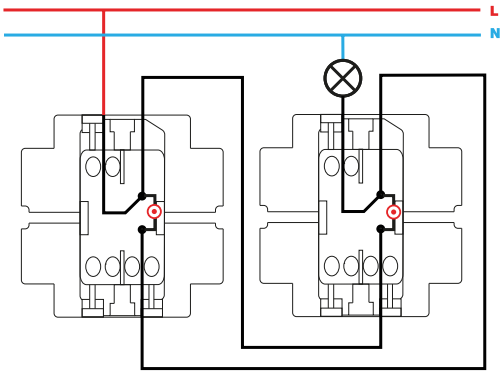

Conmutador con luminoso / 2-way switch with light
XXXX204-XXX

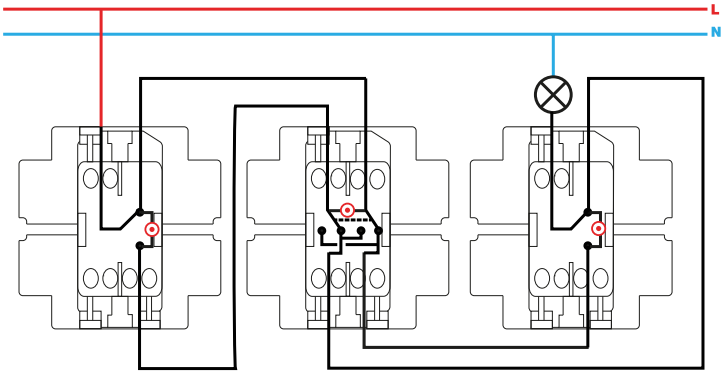

Conmutador cruce con luminoso / Intermediate switch with light
XXXX254-XXX