LED status indicator for double socket outlet Simon 500 Cima

REF. **50000802-039**



BASIC INFORMATION

DESCRIPTION

LED status indicator for double socket outlet of the series Simon 500 Cima. A series of that stands out for its adaptability to the new trends in decoration. Its dimensions are 23 x 9 x 20 mm and it is manufactured with metallic components with self-extinguishing thermoplastic insulation and halogen-free; guarantees no flame propagation in case of fire and low toxicity in the event of smoke generation. It has a detailed in graphite finish and is compatible with Schuko double socket outlets of Simon 500 Cimo. Combined with the required cover for double socket outlets with viewer. And is also suitable for combining in double socket outlets surface-mounted or flush-mounted To clean it, you need to be taken into account, you must do always with a soft and dry cloth, never use cloths or abrasive cleaners containing chlorine, as they may damage the piece.

FINISH

Graphite

MATERIAL

Various

COMPATIBILITY

German double socket outlets Simon 500 Cima

PACKAGING CONTENTS

LED status indicator for double socket outlet Simon 500 Cima and installation manual

ETIM CLASS

EC002649

REMARKS

This article is only compatible with the Simon 500 Cima German double socket outlets. Must be combined with the cover for double socket outlets with viewer.

TECHNICAL INFORMATION

AVAILABLE MARKET

CE

MAX TEMP DURING CONSTRUCTION WORK (°C)

+60 °C in surface-mount wall installation and +90 °C in flush-mount wall installation

INDICATOR FUNCTION

Yes

IP RATING

IP20

KIT AVAILABILITY

Yes

LED CONSUMPTION INDICATOR (MA)

0.55

MAINTENANCE

Clean with a soft, dry cloth. Do not use abrasive cloths or cleaning products that contain chlorine.

TEMPERATURE RANGE DURING INSTALLATION (°C)

-5 to 60 °C

VERSION

2 elements

INSTALLATION AND MAINTENANCE

TYPE OF FASTENING
By direct snap-fit in the housing of the German double socket outlet provided for that purpose (no tools needed for fastening))

INSTALLATION DIRECTION
Vertical, corresponding with the direction of the mechanisms

INSTALLATION TYPE
Suitable for combining in flush or surface-mount double socket outlets

REGULATIONS

REGULATIONS
UNE 20.315 / EN 60.998-2-3

LOGISTICS INFORMATION

UNITARY PACKAGING HEIGHT
0

UNITARY PACKAGING WIDTH
0

UNITARY PACKAGING LENGTH
0

UNITARY PACKAGING VOLUME
0

UNITARY PACKAGING GROSS WEIGHT
0.011

PRODUCT NET WEIGHT
0.011

UNITARY PACKAGING WEIGHT UNIT
KGM

PACKAGING EAN
8421053093689

UNITS CONTAINED PACKAGING
10

PACKAGING HEIGHT
92

PACKAGING WIDTH
92

PACKAGING LENGTH
110

PACKAGING MEASUREMENT UNIT
MMT

PACKAGING VOLUME
0.677

PACKAGING VOLUME UNIT
DMQ

PACKAGING GROSS WEIGHT
0

PACKAGING NET WEIGHT
0.11

PACKAGING WEIGHT UNIT
KGM

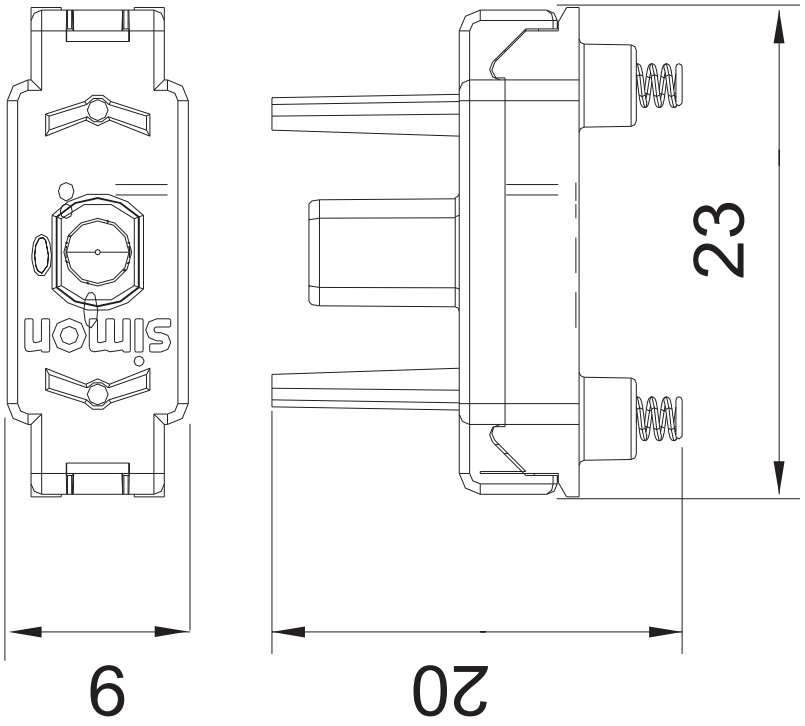
simon
23
9
20