Shallow floor box kit for raised or concrete floor 6 elements with 2 double sockets and 2 plates 1 RJ45 grey Simon 500 Cima

REF. **52006312-030**

BASIC INFORMATION

DESCRIPTION

Kit for floor box in a grey colour of the Simon 500 Cima series and is suitable for flush installation in concrete floor, as well as flush installation in raised floor. In addition, it has 6 elements, double socket, Sao and double plates for 2 RJ45 the signature 3M ®. This kit for floor box is manufactured in plastic, following the regulation UNE-EN 60.670-23 and has dimensions of 300 mm x 69 mm To be able to make a complete installation of this box in concrete floor, you will have to combine it with a plastic tray of the reference G301C and, optionally, it can be combined with the flush-mount trim cover (ref.52053203-035) in cases where you do not install the same floor covering. Its cleaning is quite simple, just use a soft, dry cloth, never abrasive cloths and / or cleaners that contain chlorine in its formula.

FINISH

Grey

COMPATIBILITY

Simon 500 CIMA mechanisms

ETIM CLASS

EC000024

MATERIAL

Plastic

PACKAGING CONTENTS

Kit and installation manual

REMARKS

To install the product in concrete floor it must be combined with a plastic tray (ref.G301C). Alternatively, it may be combined with flush-mount trim cover (ref.52053203-035) in cases where the same floor lining is not installed.

simon

TECHNICAL INFORMATION

AVAILABLE MARKET
CE

CABLE SECTION ADMITTED (MM)
From 1,5 to 2,5 mm

PROTECTION AGAINST DIRECT ACCESS OF CONTACTS
No

PROTECTION AGAINST ENTRY OF DUST AND SMALL OBJECTS
Yes, thanks to the inclusion of ductile plastic wire outputs

NUMBER OF CLAMP-HOLDER HOLES
6

NUMBER OF CONNECTIONS PER TERMINAL
1 terminal connection for click terminal connection system and 2 terminal connections for the fast terminal connection system

COMPATIBLE WITH CONNECTORS
Simon©, AMP netconnect© Standard 110, SL110, SL Tool-less, 216000 and 216005, Brand-Rex©, ADC Krone© KM8 Keystone, BeldenCDT© Giga Flex Keystone, Ersys©, General Cable©, Molex©, Panduit© Netkey, Ortronics© Clarity TechChoice Keystone, Rit© and other manufacturers with Keystone snap-fit system.

NUMBER OF CONNECTORS
2

RJ45 CONNECTORS
Not included

DIELECTRIC STRENGTH
No holes or contours, with 2000V at 50 Hz for 1 minute

MAX TEMP DURING CONSTRUCTION WORK (ºC)
+90 ºC

DUST SHUTTER
Yes

FORMAT
Schuko

HEAT RESISTANCE (ºC)
+125 ºC (in accordance with standard IEC 60695-10-2)

IK CLASSIFICATION
08

INDICATOR FUNCTION
Yes

INSULATION RESISTANCE (V-MΩ)
>5 MOhms at 500V

CURRENT (A)
16 A

IP RATING
IP4X

LED CONSUMPTION INDICATOR (MA)
0.55

LINKABLE
Yes, the sockets for a single circuit are supplied linked together.

MAINTENANCE
Clean with a soft, dry cloth. Do not use abrasive cloths or cleaning products that contain chlorine.

TEMPERATURE RANGE DURING INSTALLATION (ºC)
-5 to 60 ºC

TYPE OF MECHANISM
Insertion

NUMBER OF MODULES
6 modules

NUMBER OF PLATES
2 voice and data plates

PLATE TYPE
Flat

NUMBER OF PRE-PUNCHED HOLES 55 X 20 MM
6

RAL
7011

RECESS DIMENSION (MM)
Ø 300 mm

RJ45 ADAPTOR MODULE
Included in voice and data plates

NUMBER OF SIDE ENTRANCES
6

SNAP-FIT RJ45 PLATES
Keystone I, II, ATT®/Avaya®

SNAP-FIT TYPE
Keystone I, II, ATT®/Avaya®

NUMBER OF SOCKETS
2 double sockets for standard current circuits

VERSION
6 elements

simon

INSTALLATION AND MAINTENANCE

CABLE STRIPPING NECESSARY (MM)

0

CLAW RANGE OF OPERATION (MM)

Between 11 and 48 mm

REMOVAL OF CONNECTOR

NUMBER OF COVER OPENING POSITIONS

3

EXTINGUISHING (ºC)

+850 ºC / 30 seconds (GWFI in accordance with standard IEC 60695-2-11)

TYPE OF FASTENING

Using fastening claws on the concrete floor tray or on the raised floor tile (supplied with the floor box)

CAN BE INSTALLED IN TRAY

Plástica

INSTALLATION DIRECTION

Circular

INSTALLATION TYPE

Its design for shallow floors allows it to be installed in any type of raised or concrete floor, combining the latter installation type with tray ref. G301C

REMOVAL OF THE PLATE

Only with tool

REMOVAL OF THE SOCKET

Only with tool

TYPE OF TERMINAL CONNECTION - FUNCTION 1

1 click connection (1 click®)

NUMBER OF TERMINALS

3 inputs and 3 outputs

REGULATIONS

REGULATIONS

UNE-EN 60.670-23

LOGISTICS INFORMATION

UNITARY EAN CODE
8421053112670

UNITARY PACKAGING HEIGHT
0

UNITARY PACKAGING WIDTH
0

UNITARY PACKAGING LENGTH
0

UNITARY PACKAGING VOLUME
0

UNITARY PACKAGING GROSS WEIGHT
2.27

PRODUCT NET WEIGHT
2.27

UNITARY PACKAGING WEIGHT UNIT
KGM

PACKAGING EAN
8421053112670

UNITS CONTAINED PACKAGING
1

PACKAGING HEIGHT
0

PACKAGING WIDTH
0

PACKAGING LENGTH
0

PACKAGING VOLUME
0

PACKAGING GROSS WEIGHT
2.27

PACKAGING NET WEIGHT
2.27

PACKAGING WEIGHT UNIT
KGM

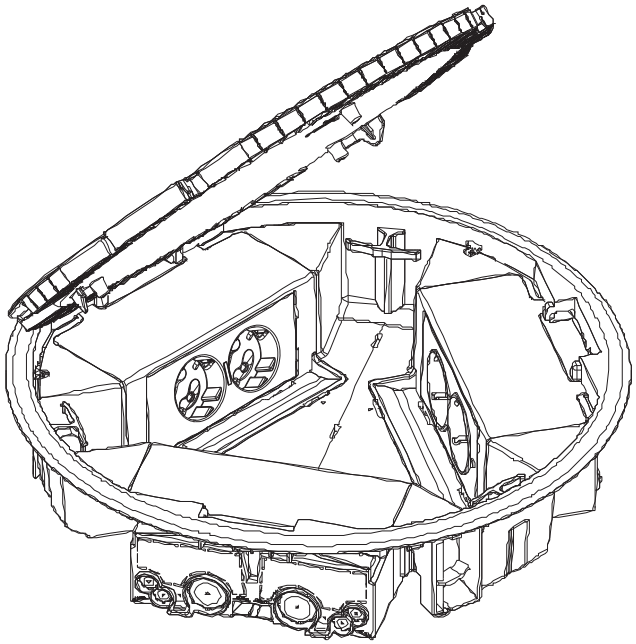

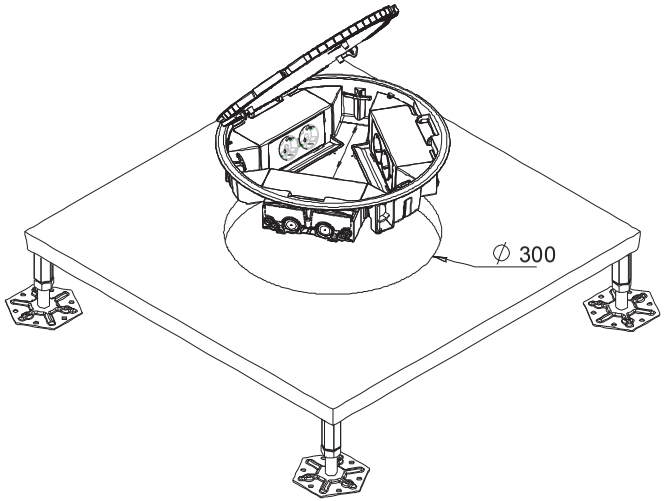
∅ 300

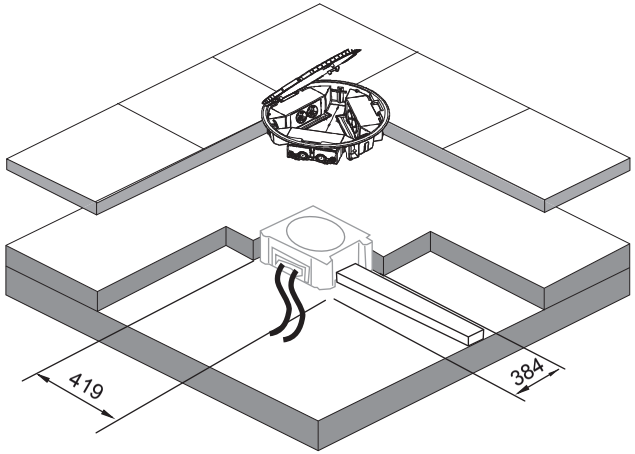
419
384

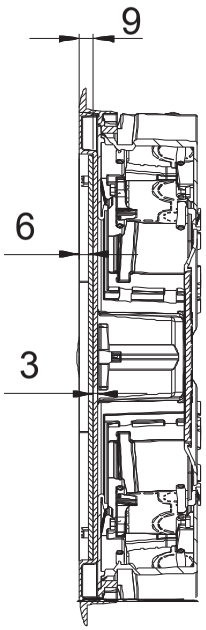
9
6
3

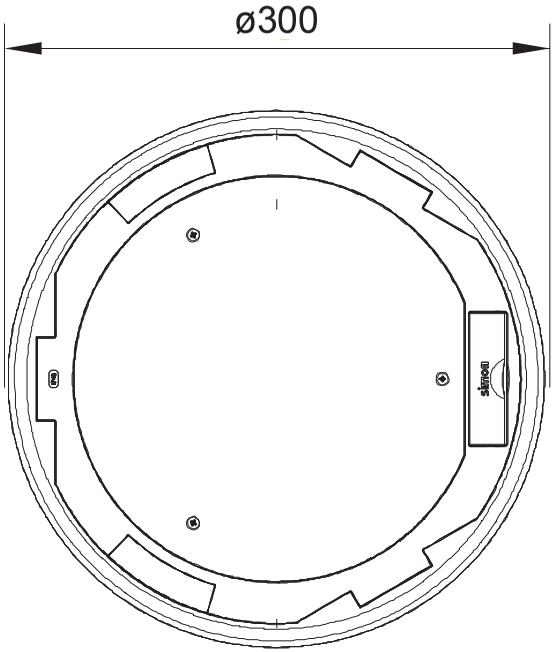
ø300