Schuko socket 16 A 250V~ with C USB charger 10,5W matt black Simon 270

REF. **20001432-098**

BASIC INFORMATION

DESCRIPTION

Discover the Simon iO blinds switch with slender rocker 700 VA bronze Simon 270 from the Simon 270 series. A product designed to deliver functionality, compatibility and style for residential and commercial installations.

FINISH

Matt black

COMPATIBILITY

Simon 270 frames

MATERIAL

Plastic

ETIM CLASS

EC000125

REMARKS

Socket outlet with 10.5W USB C charger.

TECHNICAL INFORMATION

AVAILABLE MARKET
CE

FORMAT
Schuko,USB

FREQUENCY
50 Hz

CURRENT (A)
16 A

IP RATING
IP20

MAINTENANCE
Clean with a soft, dry cloth. Do not use abrasive cloths or cleaning products that contain chlorine.

NOMINAL VOLTAGE (V~)
250 V~

POWER SUPPLY (V~)
250 V~

RAL
9005

USB CHARACTERISTICS
5,0 VDC 2,1 A 10,5W

USB CURRENT (A)
2,1 A

USB PORT TYPE
C

USB VOLTAGE (V~)
5 Vdc

VOLTAGE (V~)
250 V~

INSTALLATION AND MAINTENANCE

CABLE STRIPPING NECESSARY (MM)
14

INSTALLATION DIRECTION
Horizontal

TYPE OF TERMINAL CONNECTION - FUNCTION 1
Screw

REGULATIONS

REGULATIONS
Dir. 2014/35/UE LVD|Dir. 2014/30/UE EMC|Dir. 2011/65/UE RoHS + post. mod.|Dir. 2009/125/EC ErP (Reg. UE 2019/1782)|EN 50563:2011|EN 50563:2011 A1:2013|EN IEC 62368-1:2020 |EN IEC 62368-1:2020 A11:2020|EN IEC 63000:2018|ETSI EN 301489-34 V2.1.1|IEC 60884-1 Ed 3.2|UNE 20315-1-1:2017|UNE 20315-1-2:2017 |DS 60884-2-D1:2023

LOGISTICS INFORMATION

UNITARY EAN CODE
8421053331040

UNITARY PACKAGING HEIGHT
0

UNITARY PACKAGING WIDTH
0

UNITARY PACKAGING LENGTH
0

UNITARY PACKAGING MEASUREMENT UNIT
MMT

UNITARY PACKAGING VOLUME
0

UNITARY PACKAGING VOLUME UNIT
MMQ

UNITARY PACKAGING GROSS WEIGHT
0.092

PRODUCT NET WEIGHT
0.072

UNITARY PACKAGING WEIGHT UNIT
KGM

PACKAGING EAN
8421053331040

UNITS CONTAINED PACKAGING
1

PACKAGING HEIGHT
46.9

PACKAGING WIDTH
54.9

PACKAGING LENGTH
54.9

PACKAGING MEASUREMENT UNIT
MMT

PACKAGING VOLUME
141357.069

PACKAGING VOLUME UNIT
MMQ

PACKAGING GROSS WEIGHT
0.092

PACKAGING NET WEIGHT
0.072

PACKAGING WEIGHT UNIT
KGM

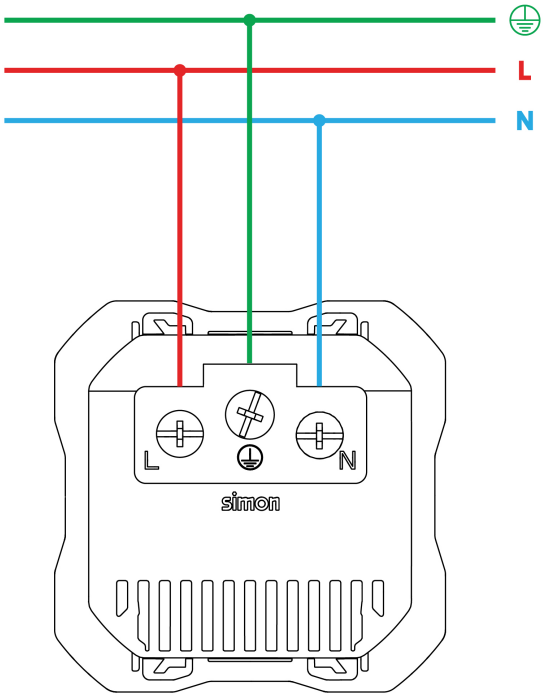

Para información más detallada consultar la hoja de instrucciones
For more detailed information check the instruction sheet