# Cover for the presence detector matte black Simon 360

REF. **36000060-098**

## BASIC INFORMATION

### DESCRIPTION

Cover for the presence detector in black finish from the Simon 360 series. The matte finish, in addition to being trendy and integrating into any environment, prevents light reflections and reduces maintenance by minimizing stains and fingerprints. Soft and quality touch that provides a sense of sophisticated product in all colors of the series. Urea is the main material and features high resistance and durability, ensuring a prolonged service life. Cover designed for installation in Simon 75 mechanisms.

### FINISH

Matt black

### COMPATIBILITY

Detector Simon 75

### MATERIAL

Thermoplastic,Steel

### ETIM CLASS

EC000011

### REMARKS

Available in 3 matte finishes s360. Frame available in the same color as the selected interior to create a single-color set or the possibility of a bicolor set. For cleaning, it is recommended to use a cloth slightly dampened with soapy water, avoiding the use of abrasive cloths or cleaners containing chlorine, to prevent damage to the product's surface.

## TECHNICAL INFORMATION

### INDICATOR FUNCTION
No

### IP RATING
IP20

### MAINTENANCE
Clean with a soft, dry cloth. Do not use abrasive cloths or cleaning products that contain chlorine.

### RAL
9005

## INSTALLATION AND MAINTENANCE

### REMOVAL OF COVER
Only with tool

### INSTALLATION DIRECTION
Horizontal, Vertical

## LOGISTICS INFORMATION

UNITARY EAN CODE
8421053440728

UNITARY PACKAGING HEIGHT
0

UNITARY PACKAGING WIDTH
0

UNITARY PACKAGING LENGTH
0

UNITARY PACKAGING MEASUREMENT UNIT
MMT

UNITARY PACKAGING VOLUME
0

UNITARY PACKAGING VOLUME UNIT
MMQ

UNITARY PACKAGING GROSS WEIGHT
0.02

PRODUCT NET WEIGHT
0.02

UNITARY PACKAGING WEIGHT UNIT
KGM

PACKAGING EAN
8421053440735

UNITS CONTAINED PACKAGING
5

PACKAGING HEIGHT
82

PACKAGING WIDTH
82

PACKAGING LENGTH
120

PACKAGING MEASUREMENT UNIT
MMT

PACKAGING VOLUME
806880

PACKAGING VOLUME UNIT
MMQ

PACKAGING GROSS WEIGHT
0.11

PACKAGING NET WEIGHT
0.09

PACKAGING WEIGHT UNIT
KGM

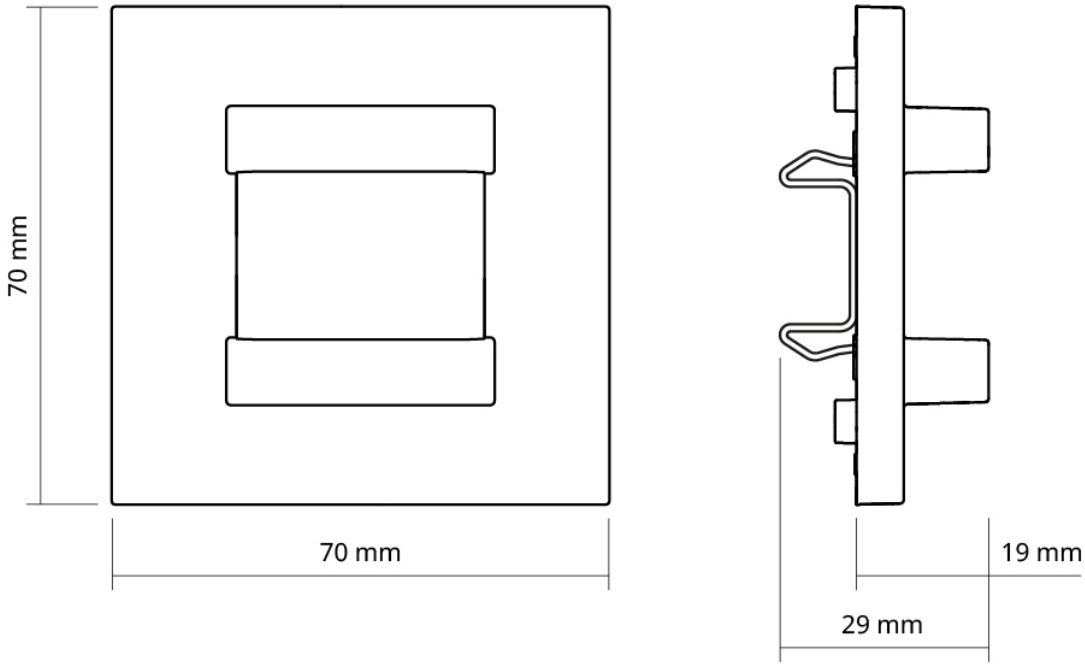
70 mm
70 mm
19 mm
29 mm