RJ45 single with connector Simon 75

REF. **7500003-039**

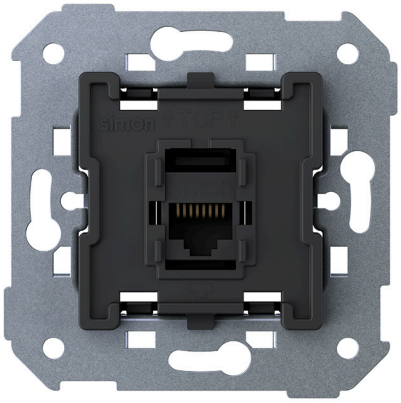

BASIC INFORMATION

DESCRIPTION

Simple RJ45 with connector from the Simon 75 series.

MATERIAL

Plastic,Metal

COMPATIBILITY

Molduras e tampas Simon 360

ETIM CLASS

EC000018

TECHNICAL INFORMATION

NUMBER OF CONNECTORS
1

FORMAT
RJ45

NUMBER OF WIRES
8

CONNECTOR TYPE
RJ45

INDICATOR FUNCTION
Yes

NUMBER OF CONTACTS
8

IP RATING
IP20

INSTALLATION AND MAINTENANCE

CLAW
Not possible

INSTALLATION DIRECTION
Horizontal, Vertical

TYPE OF TERMINAL CONNECTION - FUNCTION 1
Insertion

REMOVAL OF COVER
Only with tool

LOGISTICS INFORMATION

UNITARY EAN CODE
8421053438756

UNITARY PACKAGING HEIGHT
57

UNITARY PACKAGING WIDTH
76

UNITARY PACKAGING LENGTH
76

UNITARY PACKAGING MEASUREMENT UNIT
MMT

UNITARY PACKAGING VOLUME
329232

UNITARY PACKAGING VOLUME UNIT
MMQ

UNITARY PACKAGING GROSS WEIGHT
0.079

PRODUCT NET WEIGHT
0.046

UNITARY PACKAGING WEIGHT UNIT
KGM

PACKAGING EAN
8421053438763

UNITS CONTAINED PACKAGING
10

PACKAGING HEIGHT
75

PACKAGING WIDTH
165

PACKAGING LENGTH
415

PACKAGING MEASUREMENT UNIT
MMT

PACKAGING VOLUME
5135625

PACKAGING VOLUME UNIT
MMQ

PACKAGING GROSS WEIGHT
0.793

PACKAGING NET WEIGHT
0.46

PACKAGING WEIGHT UNIT
KGM

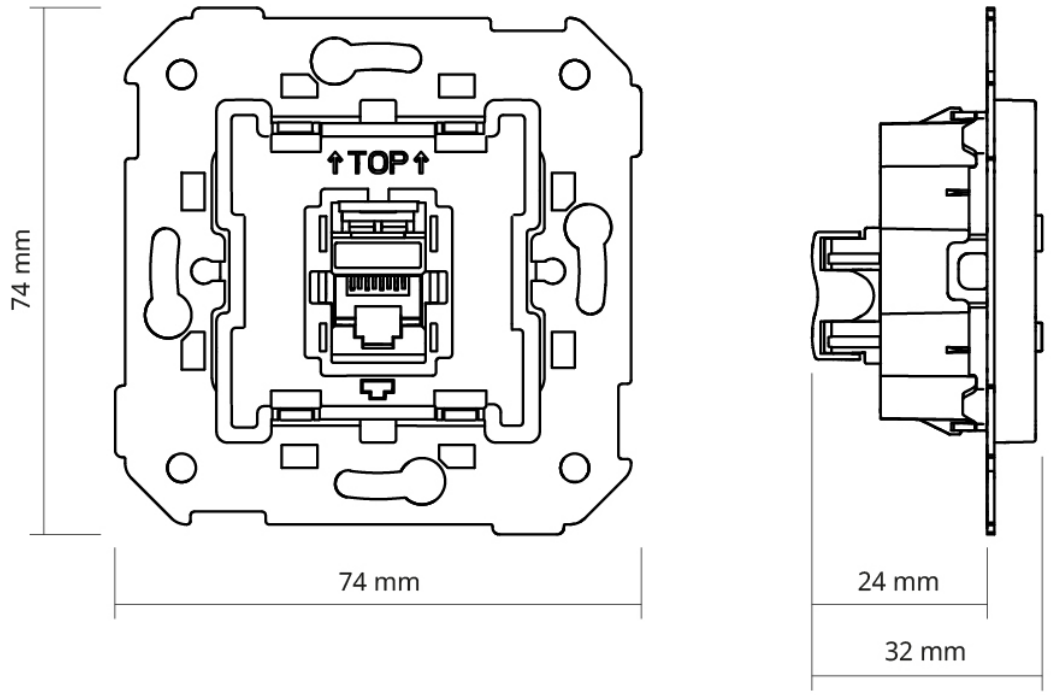
TOP
74 mm
74 mm
24 mm
32 mm