# Schuko socket cover black matte Simon 360

REF. **36000041-098**

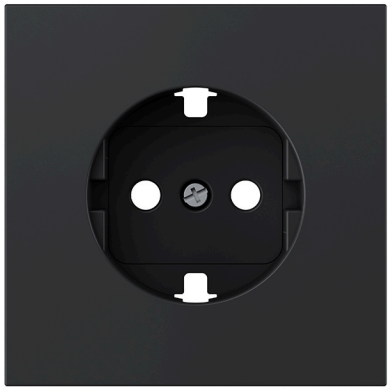

## BASIC INFORMATION

### DESCRIPTION

Cover for schuko socket in black finish from the Simon 360 series. The matte finish, in addition to being trendy and integrating into any environment, prevents light reflections and decreases maintenance by reducing stains and fingerprints. Soft and quality touch that provides a feeling of sophisticated product in all colors of the series. Urea is the main material and offers high resistance and durability, ensuring a prolonged lifespan. Cover designed for installation in Simon 75 mechanisms.

### FINISH

Matt black

### COMPATIBILITY

Tomada Simon 75

### MATERIAL

Steel,Thermostable

### ETIM CLASS

EC000011

### REMARKS

Available in 3 matte finishes s360. Frame available in the same color as the selected interior to create a single-color set or the possibility of a bicolor set. For cleaning, it is recommended to use a cloth slightly dampened with soapy water, avoiding the use of abrasive cloths or cleaners containing chlorine, to prevent damage to the product's surface.

## TECHNICAL INFORMATION

### FORMAT
Schuko

### IP RATING
IP20

### RAL
9005

### INDICATOR FUNCTION
No

### MAINTENANCE
Clean with a soft, dry cloth. Do not use abrasive cloths or cleaning products that contain chlorine.

## INSTALLATION AND MAINTENANCE

### REMOVAL OF COVER
Only with tool

### INSTALLATION DIRECTION
Horizontal, Vertical

## LOGISTICS INFORMATION

UNITARY EAN CODE
8421053437094

UNITARY PACKAGING HEIGHT
0

UNITARY PACKAGING WIDTH
0

UNITARY PACKAGING LENGTH
0

UNITARY PACKAGING MEASUREMENT UNIT
MMT

UNITARY PACKAGING VOLUME
0

UNITARY PACKAGING VOLUME UNIT
MMQ

UNITARY PACKAGING GROSS WEIGHT
0.05

PRODUCT NET WEIGHT
0.05

UNITARY PACKAGING WEIGHT UNIT
KGM

PACKAGING EAN
8421053434499

UNITS CONTAINED PACKAGING
10

PACKAGING HEIGHT
89

PACKAGING WIDTH
82

PACKAGING LENGTH
220

PACKAGING MEASUREMENT UNIT
MMT

PACKAGING VOLUME
1605560

PACKAGING VOLUME UNIT
MMQ

PACKAGING GROSS WEIGHT
0.335

PACKAGING NET WEIGHT
0.5

PACKAGING WEIGHT UNIT
KGM

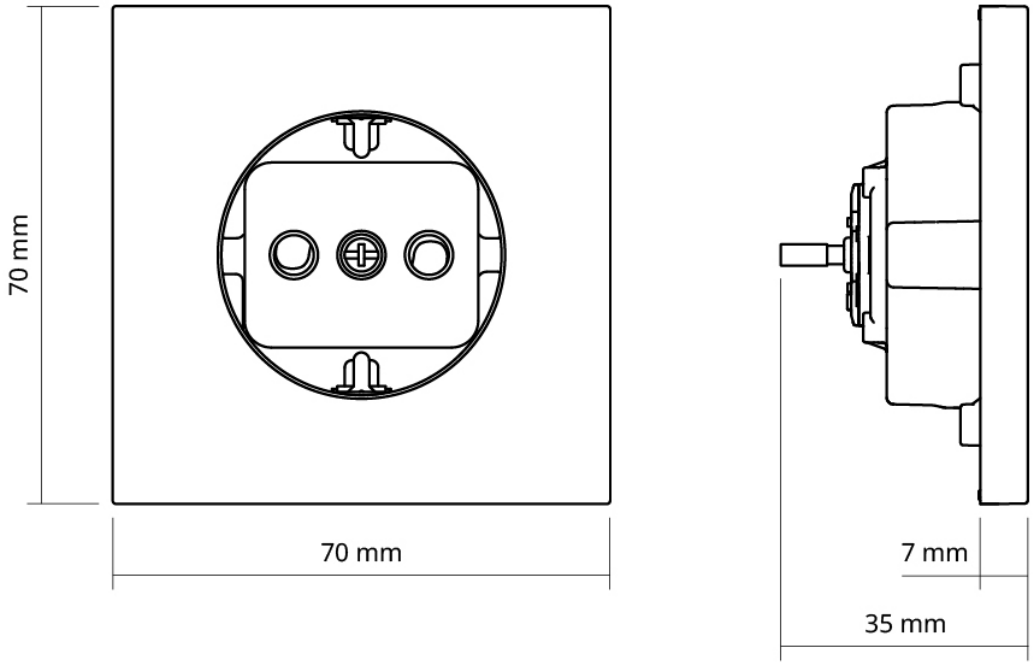
70 mm
70 mm
7 mm
35 mm