Schuko socket outlet Simon iO 16A 230 V~ with screw terminal system bronze Simon 270

REF. **21000432-097**

BASIC INFORMATION

DESCRIPTION

Discover the Simon iO blinds switch with slender rocker 700 VA bronze Simon 270 from the Simon 270 series. A product designed to deliver functionality, compatibility and style for residential and commercial installations.

FINISH

Bronze

COMPATIBILITY

Simon 270 frames

MATERIAL

Plastic,Metal

ETIM CLASS

EC000125

TECHNICAL INFORMATION

AVAILABLE MARKET
CE

CABLE SECTION ADMITTED (MM)
2 x 1,5 a 2,5 mm

FREQUENCY
50 Hz

CURRENT (A)
16 A

NUMBER OF SWITCHES
1

IP RATING
IP20

MAINTENANCE
Clean with a soft, dry cloth. Do not use abrasive cloths or cleaning products that contain chlorine.

OPERATING TEMPERATURE RANGE (ºC)
0 - 35ºC

POWER SUPPLY (V~)
230 V~

RAL
3033

VOLTAGE (V~)
230 V~

INSTALLATION AND MAINTENANCE

CABLE STRIPPING NECESSARY (MM)
10

INSTALLATION DIRECTION
Horizontal, Vertical

TYPE OF TERMINAL CONNECTION - FUNCTION 1
Screw

REGULATIONS

REGULATIONS
Dir. 2011/65/UE RoHS + post. mod.|Dir. 2014/53/UE RED|EN 50428:2005|EN 50428:2005 A1:2007|EN 50428:2005 A2:2009|EN IEC 63000:2018|ETSI EN 300328 V2.2.2|IEC 60884-1 Ed 3.2|UNE 20315-1-1:2017|UNE 20315-1-2:2017 |DS 60884-2-D1:2023

LOGISTICS INFORMATION

UNITARY EAN CODE
8421053281833

UNITARY PACKAGING HEIGHT
0

UNITARY PACKAGING WIDTH
0

UNITARY PACKAGING LENGTH
0

UNITARY PACKAGING VOLUME
0

UNITARY PACKAGING GROSS WEIGHT
0.09

PRODUCT NET WEIGHT
0.09

UNITARY PACKAGING WEIGHT UNIT
KGM

PACKAGING EAN
8421053281833

UNITS CONTAINED PACKAGING
1

PACKAGING HEIGHT
80

PACKAGING WIDTH
55

PACKAGING LENGTH
55

PACKAGING MEASUREMENT UNIT
MMT

PACKAGING VOLUME
242000

PACKAGING VOLUME UNIT
MMQ

PACKAGING GROSS WEIGHT
0

PACKAGING NET WEIGHT
0.09

PACKAGING WEIGHT UNIT
KGM

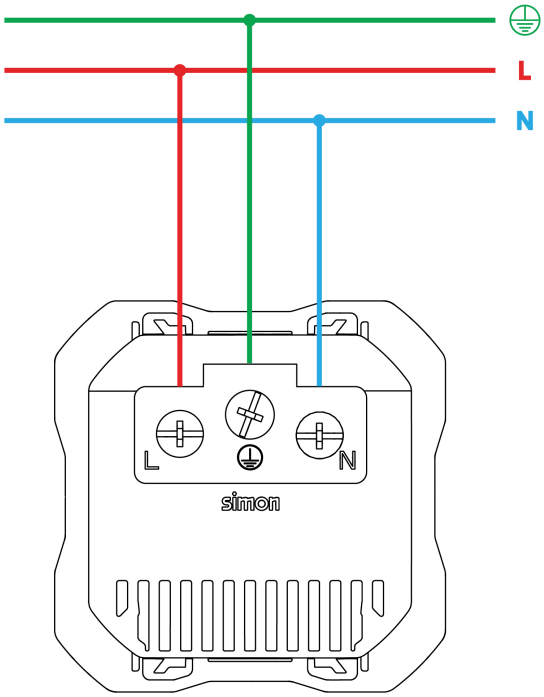

Para información más detallada consultar la hoja de instrucciones
For more detailed information check the instruction sheet