Cover for schuko + 2USB A+C matte black Simon 360

REF. **36000050-098**

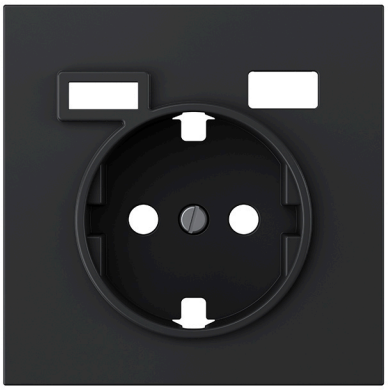

BASIC INFORMATION

DESCRIPTION

Cover for schuko + 2USB A+C in black finish from the Simon 360 series. The matte finish, in addition to being a trend and integrating into any environment, prevents light reflections and reduces maintenance by minimizing stains and fingerprints. Soft and quality feel that provides a sense of sophisticated product in all colors of the series. Urea is the main material and has high resistance and durability, ensuring a prolonged lifespan. Cover designed for installation in Simon 75 mechanisms.

FINISH

Matt black

COMPATIBILITY

Tomada Simon 75

MATERIAL

Steel,Thermostable

ETIM CLASS

EC000011

REMARKS

Available in 3 matte finishes s360. Frame available in the same color as the selected interior to create a single-color set or the possibility of a bicolor set. For cleaning, it is recommended to use a cloth slightly dampened with soapy water, avoiding the use of abrasive cloths or cleaners containing chlorine, to prevent damage to the product's surface.

simon

TECHNICAL INFORMATION

FORMAT
Schuko,USB A,USB C

IP RATING
IP20

MAINTENANCE
Clean with a soft, dry cloth. Do not use abrasive cloths or cleaning products that contain chlorine.

RAL
9005

INSTALLATION AND MAINTENANCE

REMOVAL OF COVER
Only with tool

LOGISTICS INFORMATION

UNITARY EAN CODE
8421053437124

UNITARY PACKAGING HEIGHT
0

UNITARY PACKAGING WIDTH
0

UNITARY PACKAGING LENGTH
0

UNITARY PACKAGING VOLUME
0

UNITARY PACKAGING GROSS WEIGHT
0.033

PRODUCT NET WEIGHT
0.03

UNITARY PACKAGING WEIGHT UNIT
KGM

PACKAGING EAN
8421053437131

UNITS CONTAINED PACKAGING
5

PACKAGING HEIGHT
82

PACKAGING WIDTH
82

PACKAGING LENGTH
120

PACKAGING MEASUREMENT UNIT
MMT

PACKAGING VOLUME
806880

PACKAGING VOLUME UNIT
MMQ

PACKAGING GROSS WEIGHT
0.17

PACKAGING NET WEIGHT
0.14

PACKAGING WEIGHT UNIT
KGM

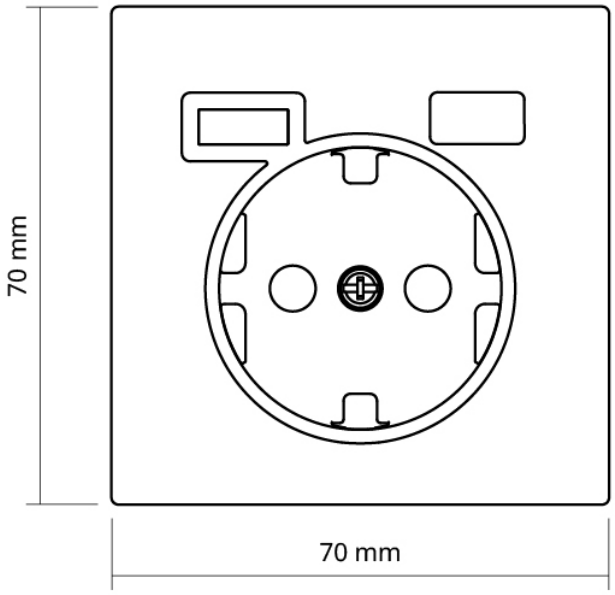
70 mm
70 mm

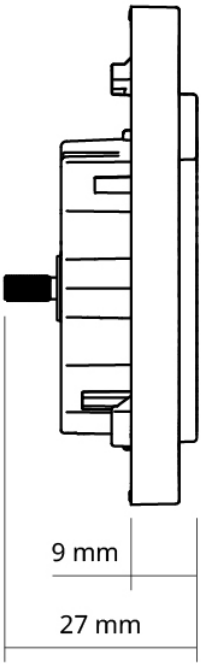
9 mm
27 mm