Schuko socket base LOLA 16A 250 V~ with screw terminal connection white matte Simon 360

REF. **36100432-190**

BASIC INFORMATION

DESCRIPTION

Schuko socket base LOLA 16A 250 V~ with screw terminal connection system in white finish from the Simon 360 series. In matte finish. The matte finish prevents light reflections and reduces maintenance by minimizing stains and fingerprints. Urea is the main material and boasts high resistance and durability, ensuring a long lifespan.

FINISH

Matt white

COMPATIBILITY

Molduras e tampas Simon 360

MATERIAL

Steel,Thermostable

ETIM CLASS

EC000125

REMARKS

Requires connection to the HUB MINI to enable communication, configuration, and control of the smart system.

TECHNICAL INFORMATION

FREQUENCY
50 - 60 Hz

INDICATOR FUNCTION
Yes

CURRENT (A)
16 A

IP RATING
IP20

LINKABLE
Yes

MAINTENANCE
Clean with a soft, dry cloth. Do not use abrasive cloths or cleaning products that contain chlorine.

RECESS DIMENSION (MM)
40

VOLTAGE (V~)
230 V~

INSTALLATION AND MAINTENANCE

CABLE STRIPPING NECESSARY (MM)
10

CLAW
Simon 27

REMOVAL OF COVER
Only with tool

TYPE OF TERMINAL CONNECTION - FUNCTION 1
Screw

LOGISTICS INFORMATION

UNITARY EAN CODE
8421053438602

UNITARY PACKAGING HEIGHT
0

UNITARY PACKAGING WIDTH
0

UNITARY PACKAGING LENGTH
0

UNITARY PACKAGING VOLUME
0

UNITARY PACKAGING GROSS WEIGHT
0

PRODUCT NET WEIGHT
0

UNITARY PACKAGING WEIGHT UNIT
KGM

PACKAGING EAN
8421053438602

UNITS CONTAINED PACKAGING
1

PACKAGING HEIGHT
0

PACKAGING WIDTH
0

PACKAGING LENGTH
0

PACKAGING MEASUREMENT UNIT
MMT

PACKAGING VOLUME
0

PACKAGING VOLUME UNIT
MMQ

PACKAGING GROSS WEIGHT
0

PACKAGING NET WEIGHT
0

PACKAGING WEIGHT UNIT
GRM

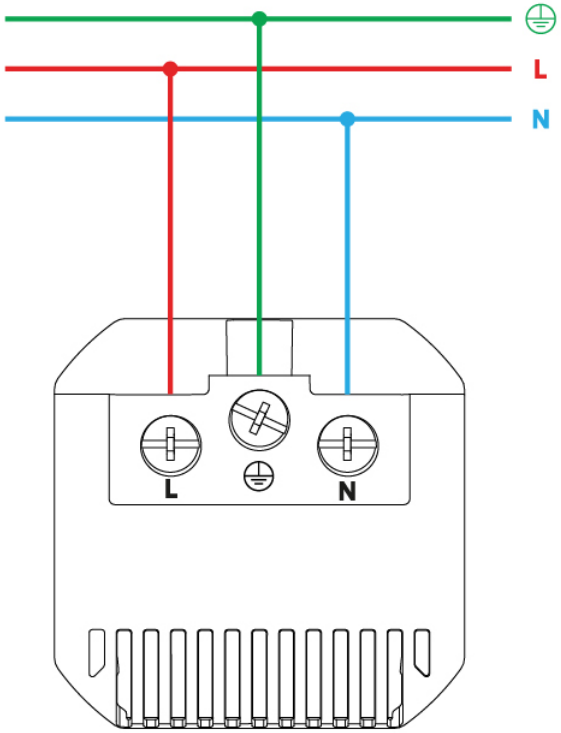
L
N
L
N

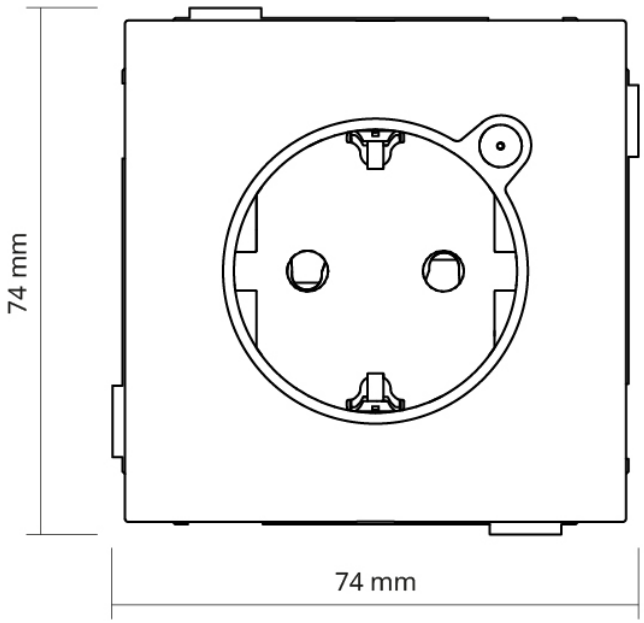
74 mm
74 mm

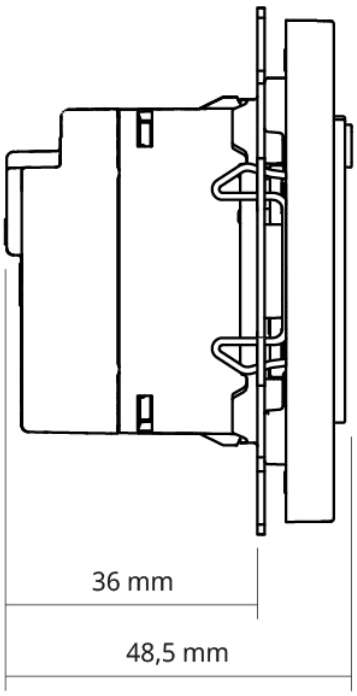
36 mm
48,5 mm